DROP DOWN, SINGLE, PROMASTER 118” LR

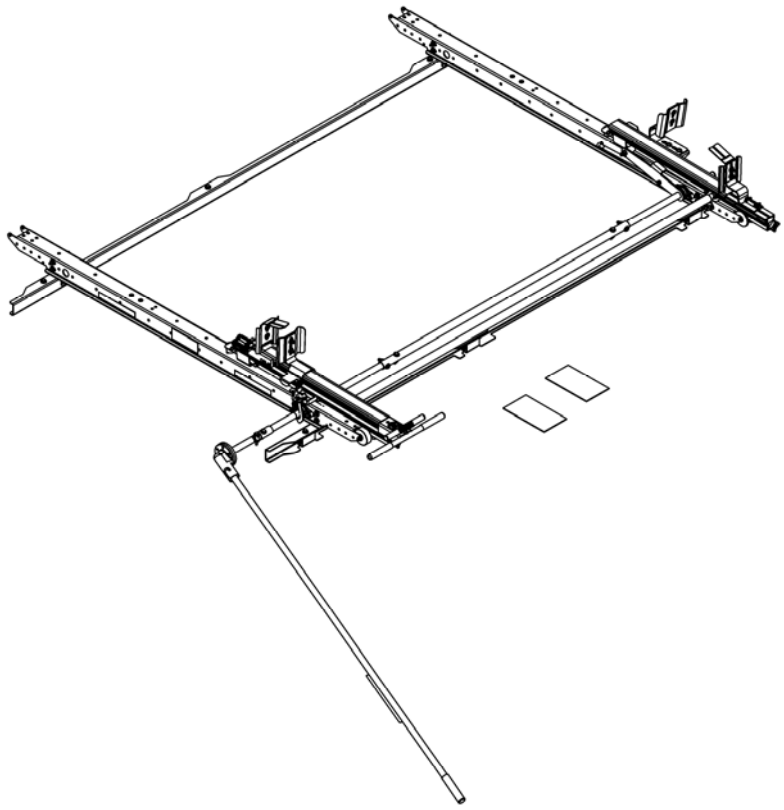

PRODUCT WEIGHT

106 lbs

WIDTH x DEPTH x HEIGHT

79”X106”X18”

CAPACITY

28 FOOT EXT

COLOR

Aluminum / Black

CATALOG NUMBER

DD61PML118

PRODUCT FEATURES

This drop down rack and roof cross-bow kit is designed to fit the PROMASTER 118” Low Roof. The drop down will carry 20 to 28 foot extension ladders, and 10-12 foot step ladders. Step ladders shorter than 10’ require DDLRSLK2 step ladder kit. Step ladders wider than 26” at the base require the wide step ladder add on, part 57107. Ladders with extensive gussets or platform step ladders may not be compatible with the rack.

SEE PAGE 2 FOR APPLICATION NOTES AND ACCESSORIES, OTHER PRODUCTS THAT WORK WITH THIS UNIT.

The information contained in this document is the sole property of ADRIAN STEEL COMPANY. ADRIAN STEEL COMPANY retains the right to modify and/or change the product of its design at any time without prior notification.

CATALOG NUMBER DD61PML118

PRODUCT APPLICATION

This Drop down unit is designed to fit the PROMASTER 118”WB Low Roof.

ACCESSORIES THAT WILL WORK WITH THIS PRODUCT

CATALOG NUMBER	***DESCRIPTION***
DDLR61MSS	**DROP DOWN, STREET SIDE, LOW ROOF (CONVERT TO DBL)**
DDLRSLK2	**STEP LADDER KIT**
80-1LR **80-2LR**	**CONDUIT KIT, ALUMINUM**
70-1LR **70-2LR**	**PVC CONDUIT KITS**
57107	**DDLR WIDE STEP LADDER KIT-ADD ON PIECE**
65-GL	**UTILITY ADD-ON KIT FOR LADDER RACKS**

SPECIAL APPLICATION NOTES

The information contained in this document is the sole property of ADRIAN STEEL COMPANY. ADRIAN STEEL COMPANY retains the right to modify and/or change the product of its design at any time without prior notification.