Introduction / Comments:

THIS LADDER RACK IS DESIGNED TO MOUNT TO THE FACTORY ATTACHMENT POINTS. REMOVE PLASTIC PLUGS TO INSTALL NEW RACK.

THIS RACK IS DESIGNED FOR AND RATED TO CARRY UP TO 24' EXTENSION LADDERS OR 175 LBS FOR CARGO VAN, 120 LBS FOR PASS VAN, EVENLY DISTRIBUTED ON THE RACK. BE SURE ANY LOAD OR LADDER IS PROPERLY SECURED TO THE RACK PRIOR TO MOVING VEHICLE. **IT IS NOT RECCOMMENDED TO CARRY LONG LADDERS ON THE REAR HATCH VERSION AS THE HATCH WILL HIT LADDER WHEN OPENED. DUAL REAR CARGO DOORS ARE BEST IF CARRYING LONG LADDERS. BIAS LADDER FORWARD TO CLEAR HATCH.**

NOT FOR USE WITH PANORAMIC ROOF OR SUNROOFS.

NOTE : THIS RACK UTILIZES SPECIFIC STREET AND CURB SIDE ROOF RAIL ASSEMBLIES!!!

Note:
It is advised that all fasteners used in this assembly and installation of this Rack should be checked for tightness at the following intervals: @ 2-weeks and again @ 6-weeks of operation. This preventive maintenance step must be completed to ensure your package gives you long service life.

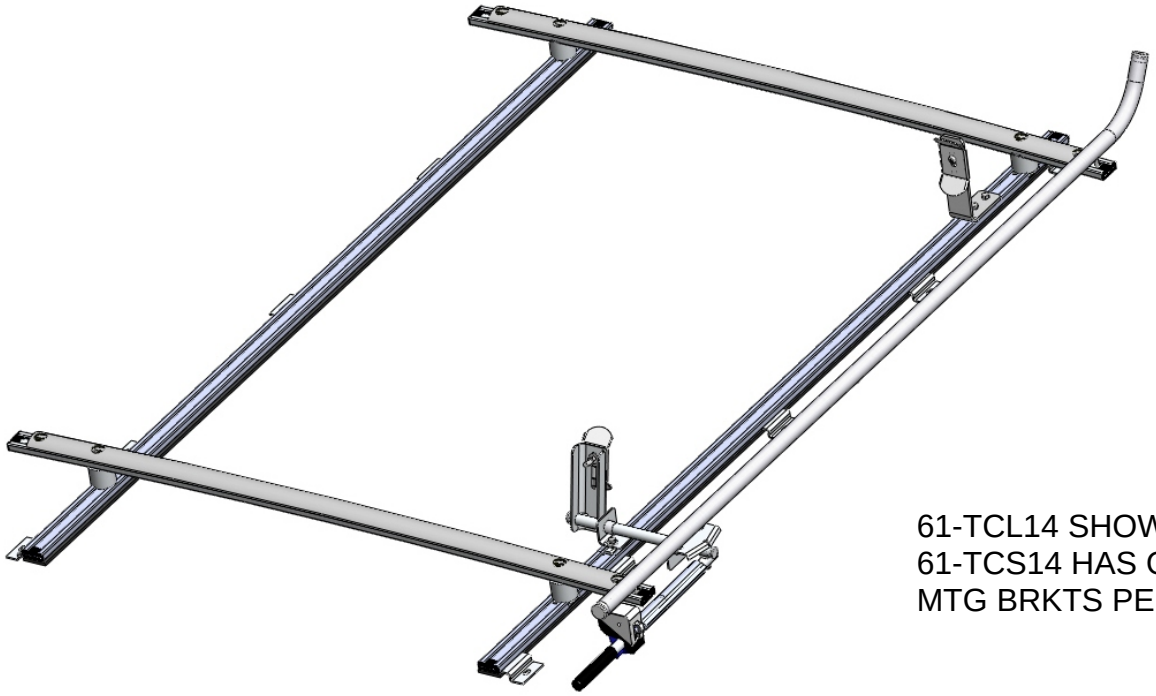

61-TCL14 SHOWN
61-TCS14 HAS ONLY 4 MTG BRKTS PER SIDE.

61-TCL14 & 61-TCS14
SINGLE GRIP-LOCK LADDER RACKS FOR 2014 FORD TRANSIT CONNECT VANS

- PRECAUTIONS -

CAUTION

THE USE OF AIR IMPACT TOOLS CAN OVER-TORQUE FASTENERS AND CAUSE FASTENER FAILURE!

CAUTION

ALL INSTALLATION HOLES SHOULD BE SEALED WITH SILICON OR BUTYL SEALANT TO PREVENT EXHAUST FUMES FROM ENTERING THE VEHICLE!

DANGER

INSPECT FOR FUEL TANK, FUEL LINES, BRAKE LINES, HIGH VOLTAGE BATTERIES AND ELECTRICAL LINES PRIOR TO DRILLINGTO AVOID DAMAGING CRITICAL VEHICLE SYSTEMS OR INJURY TO INSTALLER DURING INSTALLATION PROCESS!

CAUTION

TO AVOID DAMAGING THE VEHICLE ALWAYS USE DRILL STOPS WHEN DRILLING ANY IN-STALLATION HOLES!

- IMPORTANT WARRANTY REQUIREMENTS -

1. **SUBSTITUTING ADRIAN STEEL SPECIFIED FASTENERS FOR ASSEMBLY AND/OR INSTALLATION WILL VOID YOUR PRODUCT WARRANTY.**
2. **ALL HOLES DRILLED INTO VEHICLE SHOULD HAVE THE RAW METAL EDGES SEALED WITH A SELF -ETCHING PRIMER TO RESIST CORROSION AND POTENTIAL FASTENER POINT FAILURE.**
3. **ALL FASTENERS USED IN THE INSTALLATION OF THIS PRODUCT SHOULD BE TIGHTENED TO THE TORQUE(S) SPECIFIED IN THESE INSTRUCTIONS.**
4. **THESE INSTRUCTIONS SHOULD BE KEPT WITH THE VEHICLE.**

THE BASIC TOOLS NEEDED FOR MOST INSTALLATIONS

DRILL

DRILL BIT WITH STOP

RATCHET, SOCKETS AND/OR WRENCHES

SCREWDRIVERS

MEASURING TAPE

ADDITIONAL TOOLS MAY BE NEEDED FOR THIS INSTALLATION AND THEY WILL BE IDENTIFIED IN THE STEPS THAT FOLLOW.

BAG61TC14
FASTENER BAG FOR 61-TCL14 & 61-TCS14 LADDER RACKS

ITEM NO.	PART NUMBER	DESCRIPTION	BAG61TC14/QTY.
1	35335-0	SLIDE	8
2	36496-0	End Cap, RAIL EXTR #2	8
3	FAS0698	PIN, SPRING .312X1.50 SS	1
4	FAS0242	Screw, Hex Hd, 5/16-18x1.50 Stainless Steel	12
5	FAS0577	Screw, Button Hd Hex Soc, 3/8-16x1.50 NI-ZN	2
6	FAS0830	Screw, Hex Hd, 5/16-18 X 1.25 SS	3
7	FAS 0720	Washer,Flat 3/8 SS	2
8	FAS0110	Nut,Hex Nylk 3/8-16 SS W	2
9	FAS0740	Shoulder Bolt,	1
10	FAS0552	Washer, Flat, 5/16, SST	21
11	FAS0234	Washer, Flat, 1/4, SST	1
12	FAS0125	Nut, Nylon Insert Lock, 1/4-20 SST	1
13	FAS0588	Washer, Lock, Split, 5/16, SS	23
14	BAG0709-A	7" x 9" 3MIL AUTOBAG	1
15	FAS0717	Screw, Hex Hd, 5/16-18x.625 SST	4
16	FAS0243	Screw, Hex Hd, 5/16-18x2.50 Stainless Steel	4
17	FAS0091	Plusnut, 5/16	10

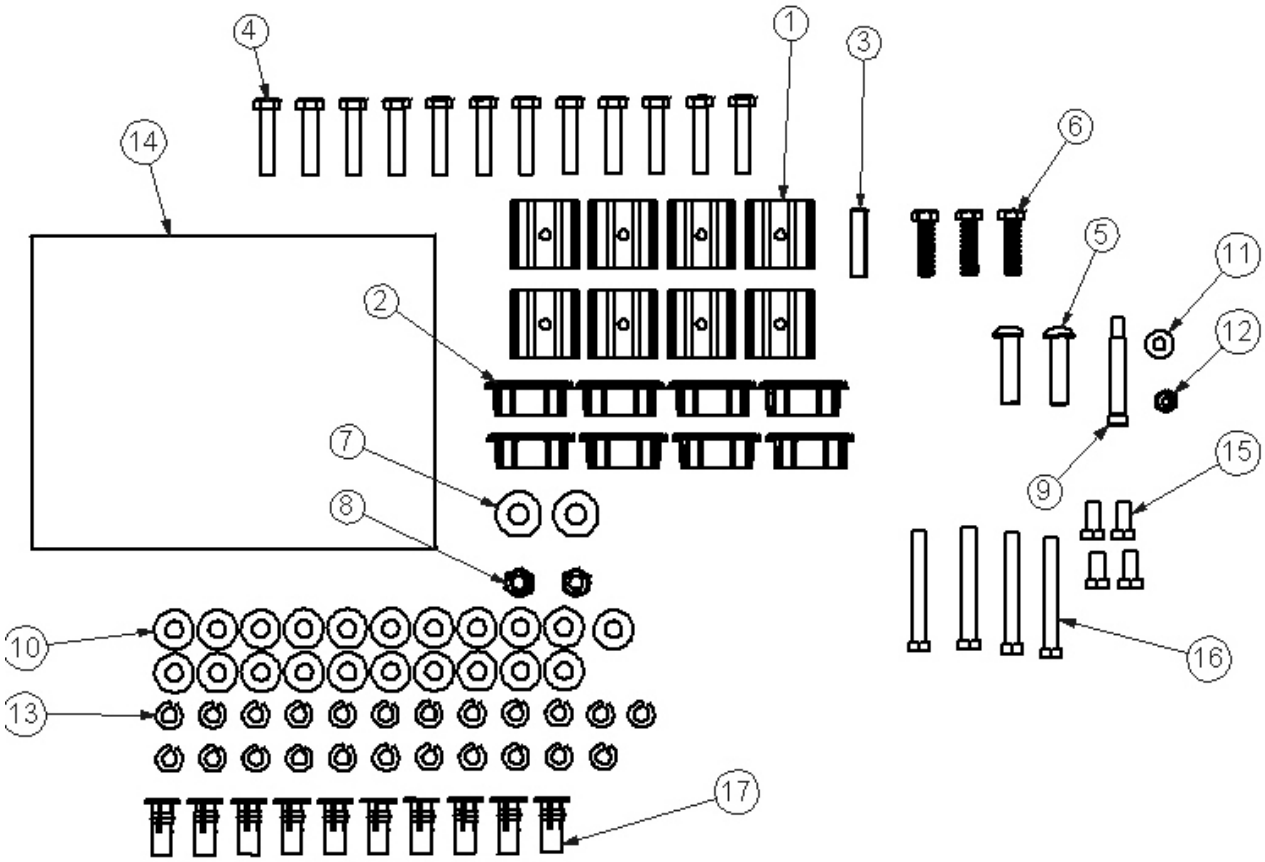

BAG45261 ACCESSORY BAG FOR 61-TCL14 & 61-TCS14

ITEM NO.	PART NUMBER	DESCRIPTION	BAG45261/QTY.
1	38846-B	BUSHING, G/L, TC	2
2	37517-0	End Cap, Black	2
3	37516-0	Cap/Plug 1-1/4" Tube	2
4	BAG0507-A	5" x 7" 3MIL AUTOBAG	1
5	26618-0	Silicone Sealant	1
6	05586-0	Butyl Tape, T224 -1/2"X 2' Roll	2

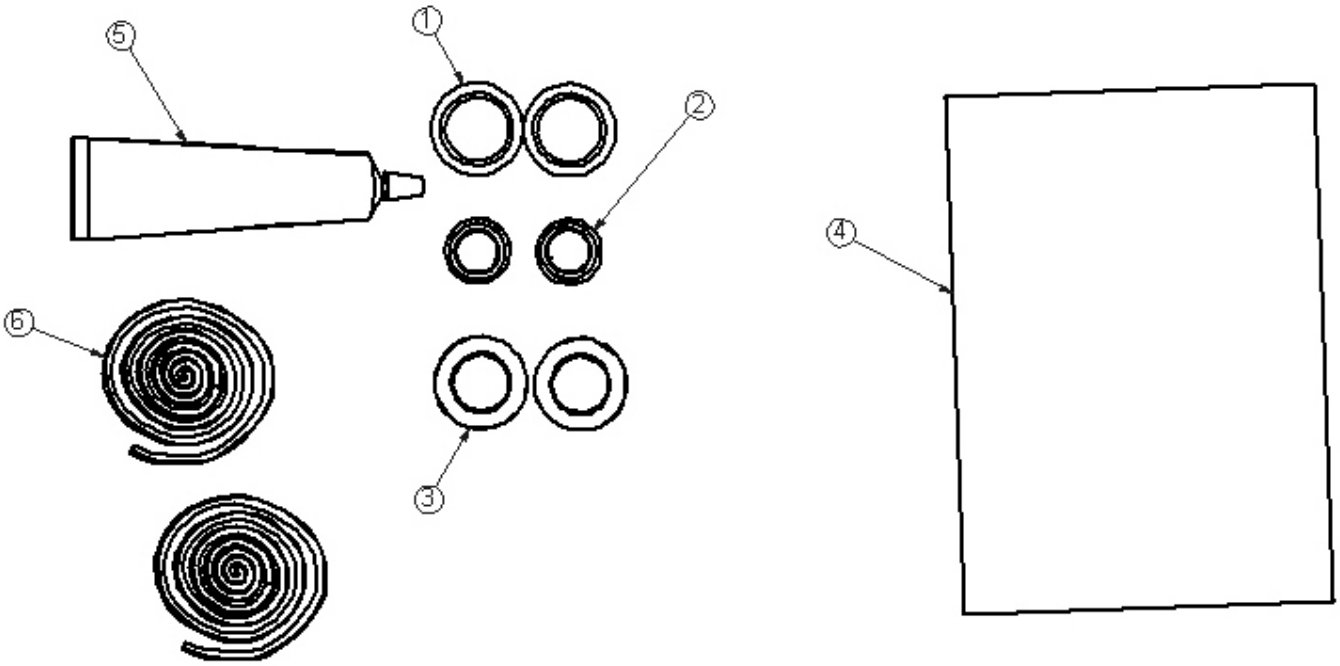

STEP #01: ASSEMBLE ROOF RAILS. NOTE DIFFERENCES BETWEEN STREET AND CURB SIDE ROOF RAIL ASSEMBLIES!!

INSERT (6) 35335-0 SLIDES INTO CURB SIDE ROOF RAIL, 2 SLIDES INTO STREET SIDE ROOF RAIL, AND (1) 36496-0 END CAP INTO EACH END (4 TOTAL). PEEL AND STICK FOAM STRIP TO BOTTOM OF EACH RAIL.

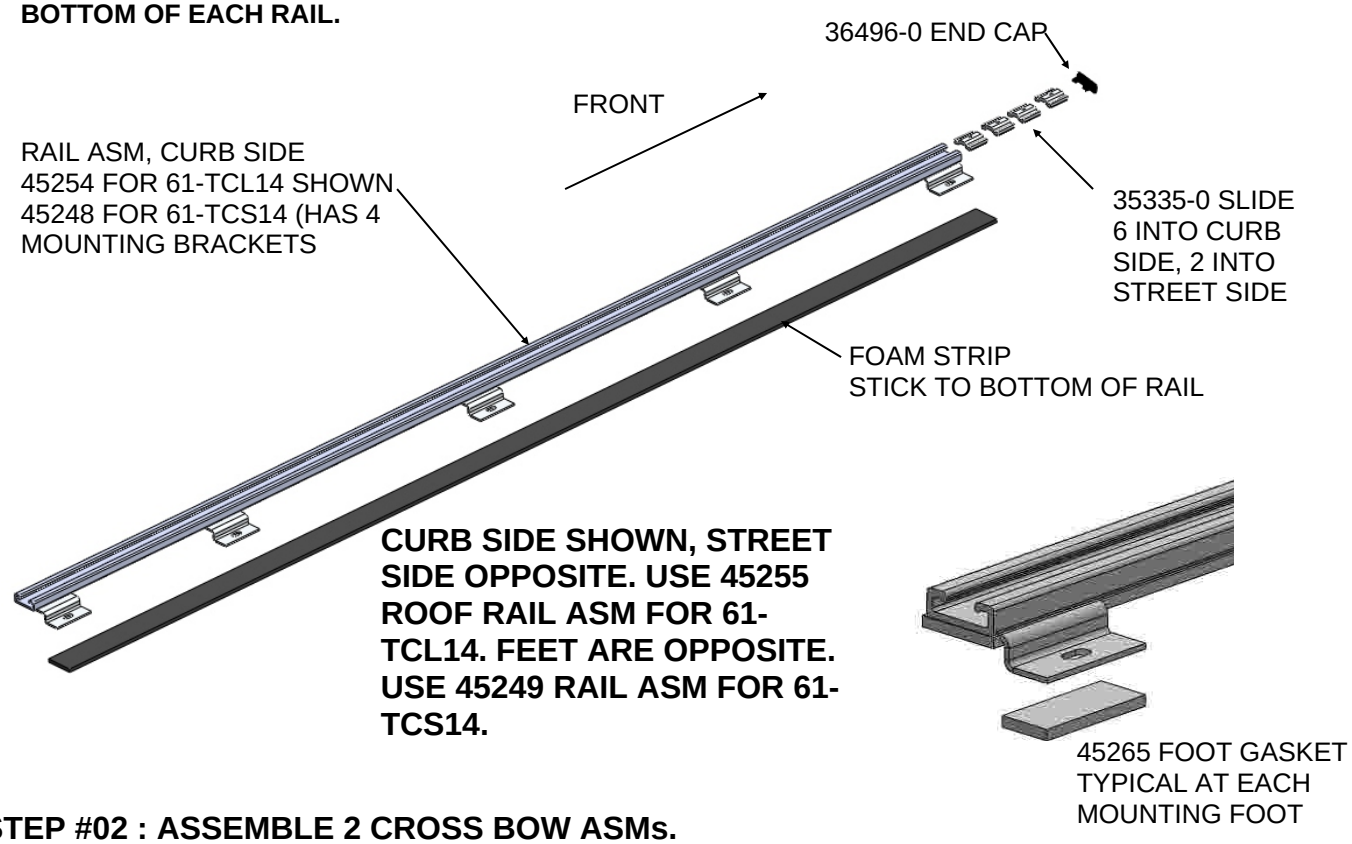

STEP #02 : ASSEMBLE 2 CROSS BOW ASMs.

SLIDE WEAR INSERT INTO CROSS BOW UNTIL INNER HOLES LINE UP ON EACH END. FOR EASE OF ASSEMBLY, BEND WEAR INSERT TO APPROXIAMATE CURVATURE OF BOW WHILE INSERTING. NOTE : SOME OF THE PLASTIC WILL SHAVE OFF AS THIS IS AN INTERFERENCE FIT. AFTER INSERTING AS FAR AS YOU CAN BY HAND, OCCASIONALLY THE CAREFUL USE OF A BLOCK OF WOOD AND A HAMMER OR MALLET TO REACH FINISHED POSITION MAY BE NECESSARY. INSERT (1) 36496-0 END CAP INTO EACH END OF EACH BOW ASM.

STEP #03 : ASSEMBLE LADDER STOP TO ROOF RAIL, CURB SIDE ONLY

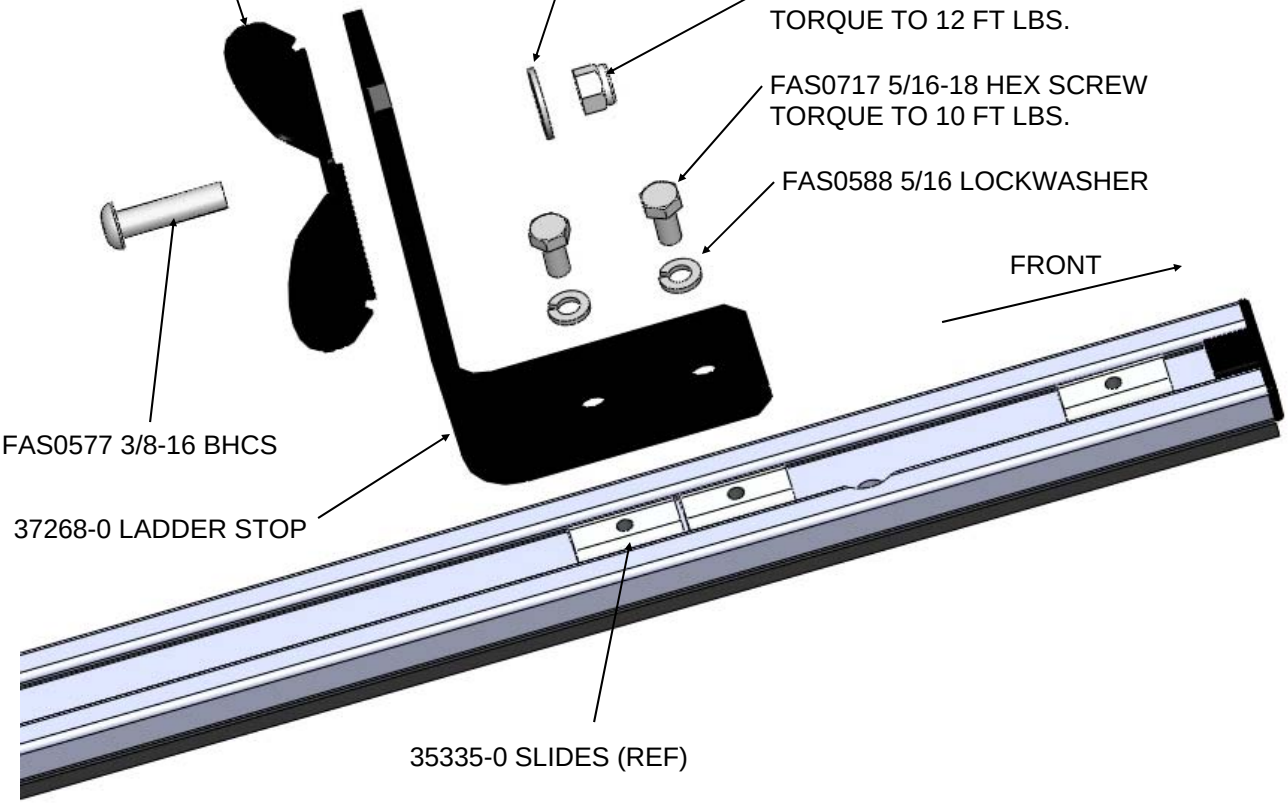

STEP #04 : ASSEMBLE BOW ASMS TO ROOF RAILS

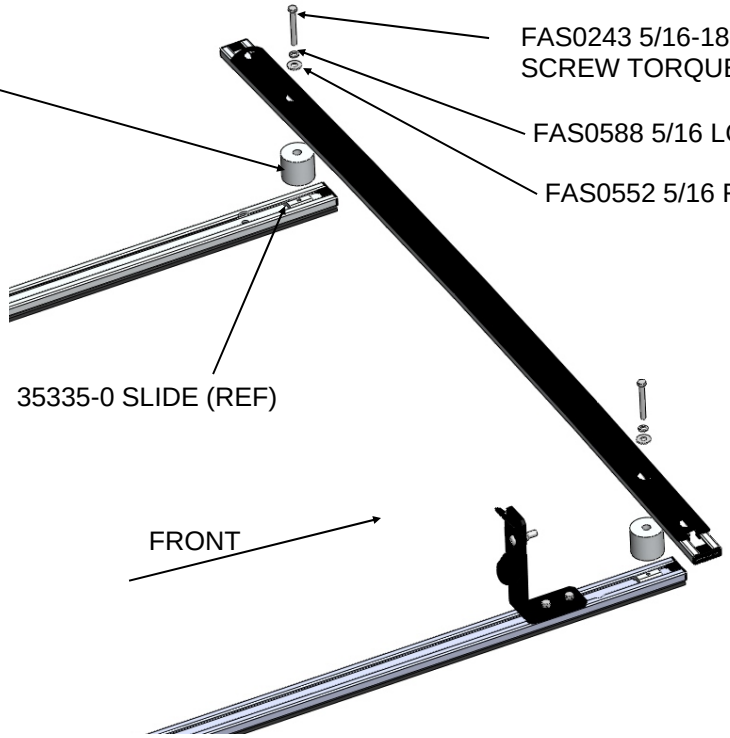

FRONT SHOWN. REAR ASSEMBLY SAME AS FRONT. POSITION FRONT AS SHOWN. REAR BOW POSITION WILL BE DETERMINED BY THE OUTER RAIL. SEE NEXT STEP.

STEP #05 ASSEMBLE OUTER RAILS TO RACK

INSTALL (2) 37516-0 END CAPS INTO TUBE ENDS, INSTALL LATCH ASM AS SHOWN AND INSTALL ASM ON RACK.

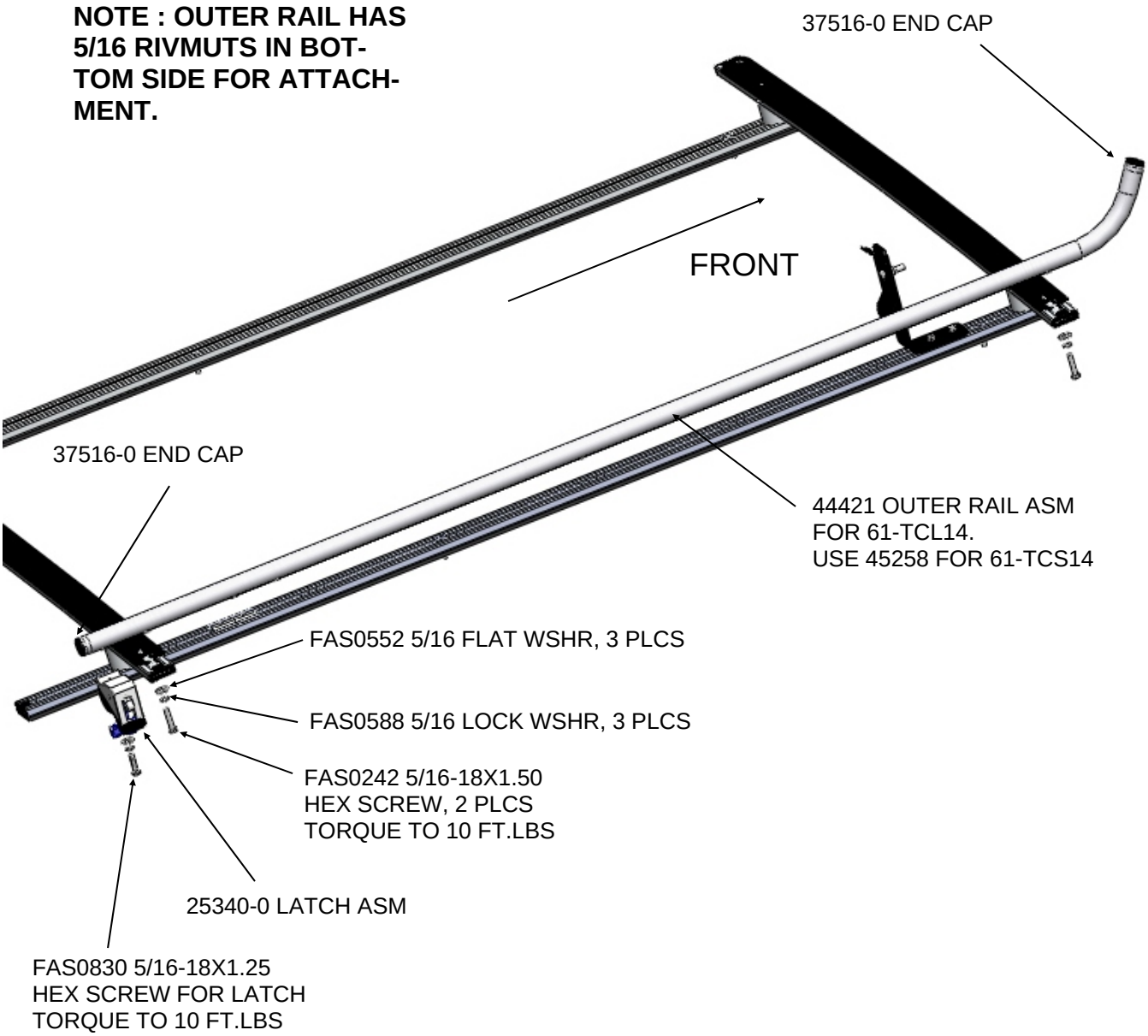

STEP #06 ASSEMBLE GRIP-LOCK MECHANISM AND INSTALL ON RACK

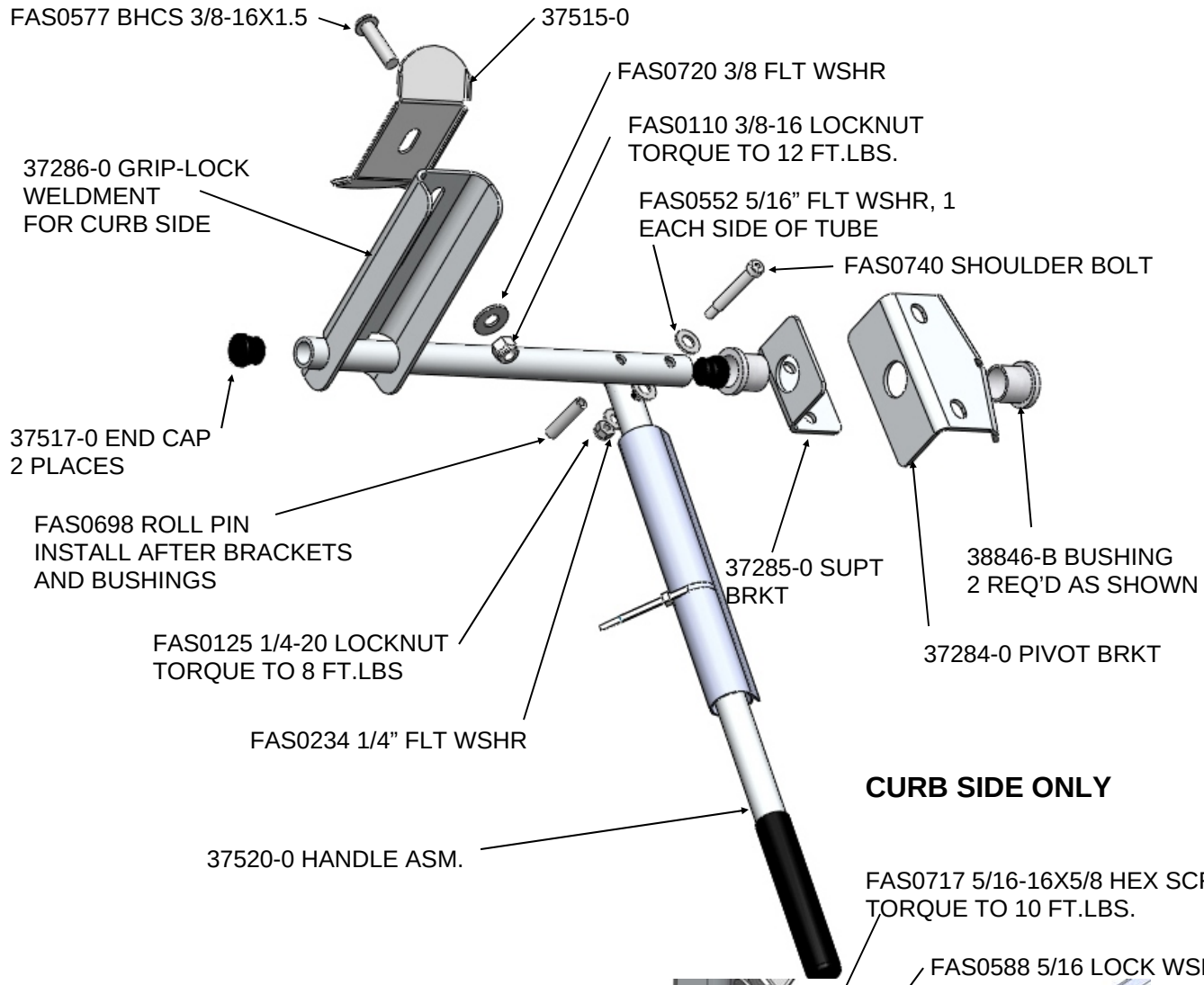

STEP #07 ASSEMBLE GRIP-LOCK RACK TO VEHICLE

REMOVE OEM PLASTIC PLUGS FROM ROOF. THESE ARE THE ATTACHMENT POINTS FOR THE RACK. THERE ARE 5 PER SIDE ON THE LONG WHEELBASE AND 4 PER SIDE ON THE SHORT WHEELBASE. CHECK TO MAKE SURE NOTHING IS BELOW THE HOLES (ie WIRING, AIRBAGS, ETC.)DRILL THE HOLES OUT TO 0.500" **USING BITS WITH DRILL STOPS! ALSO USE CLOTHS TO PREVENT HOT SHAVINGS FROM EMBEDDING IN PAINT!! CLEAN OFF SHAVINGS IMMEDIATELY.** SET AN FAS0091 PLUSNUT IN EACH HOLE, PREPARED AS SHOWN BELOW. POSITION THE RACK ON ROOF AND FASTEN AS SHOWN BELOW, RAIL ASSEMBLIES WILL HAVE TO BE FASTENED FROM ONE END TO THE OTHER AND PUSHED DOWN TO CONFORM TO THE CURVATURE OF THE ROOF.

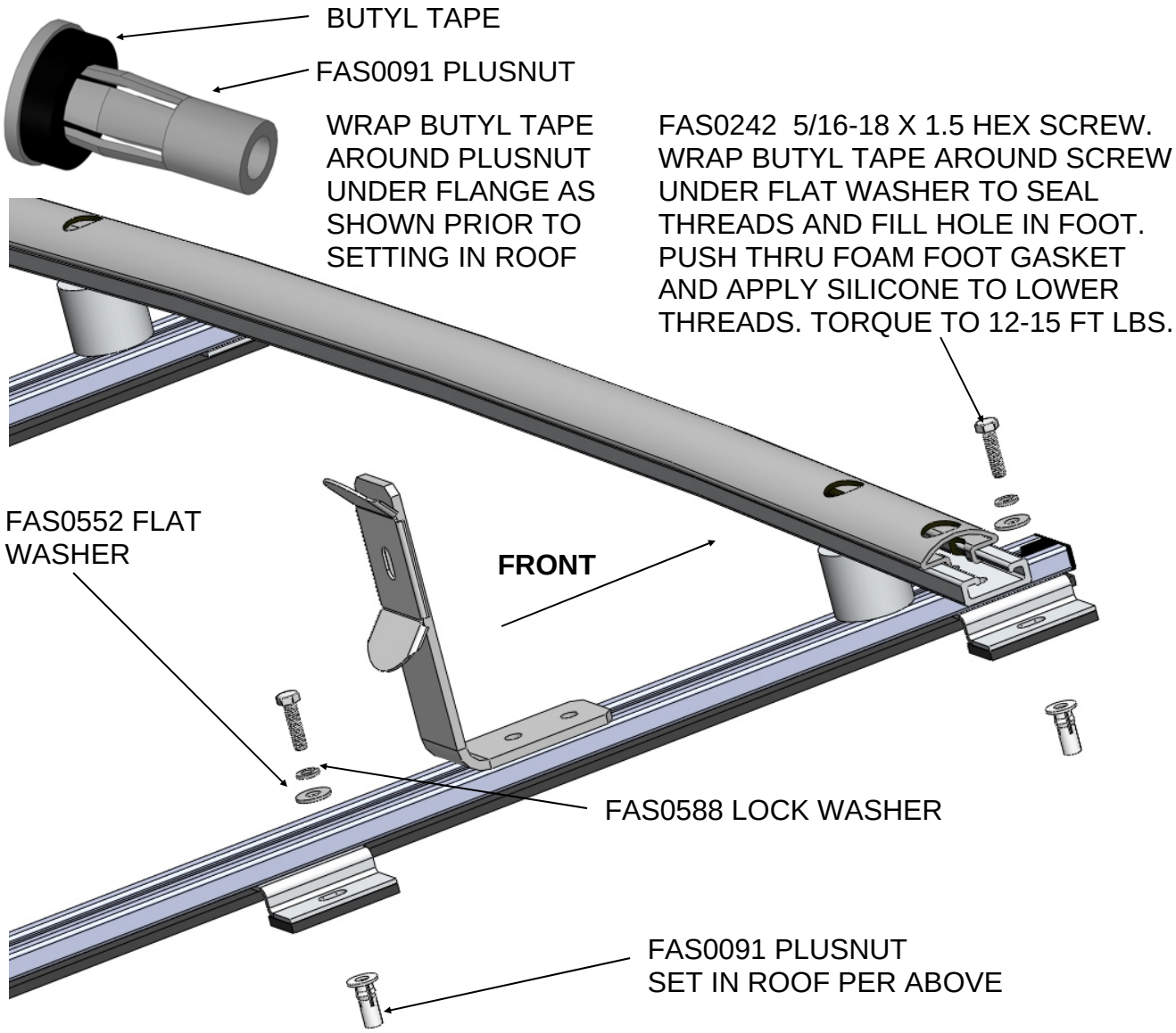

DOUBLE-CHECK ALL FASTENER LOCATIONS TO BE SURE THAT ALL FASTENERS ARE TIGHTENED TO SPECIFICATIONS!