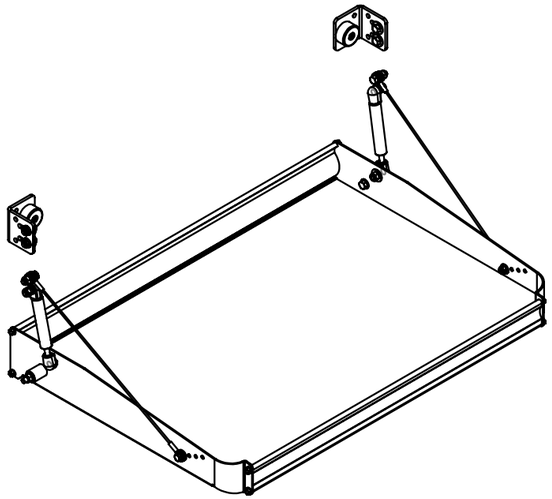

84-2130

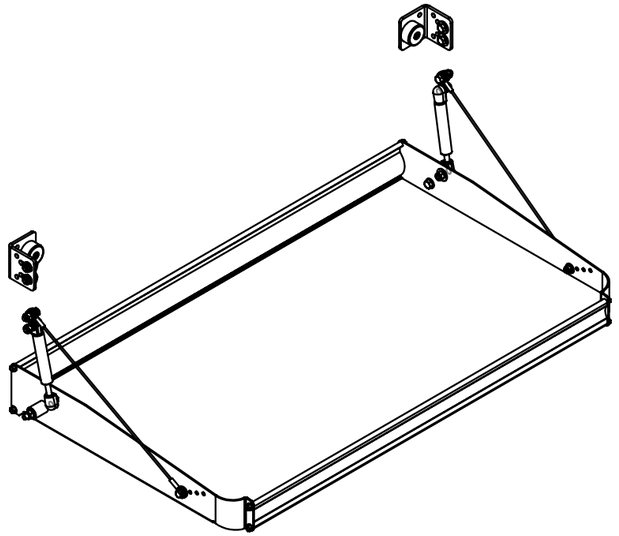

84-2136

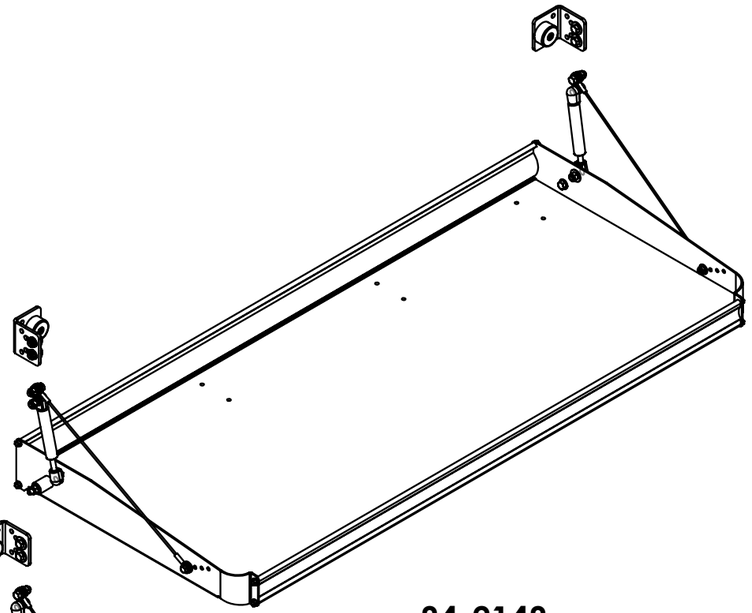

84-2148

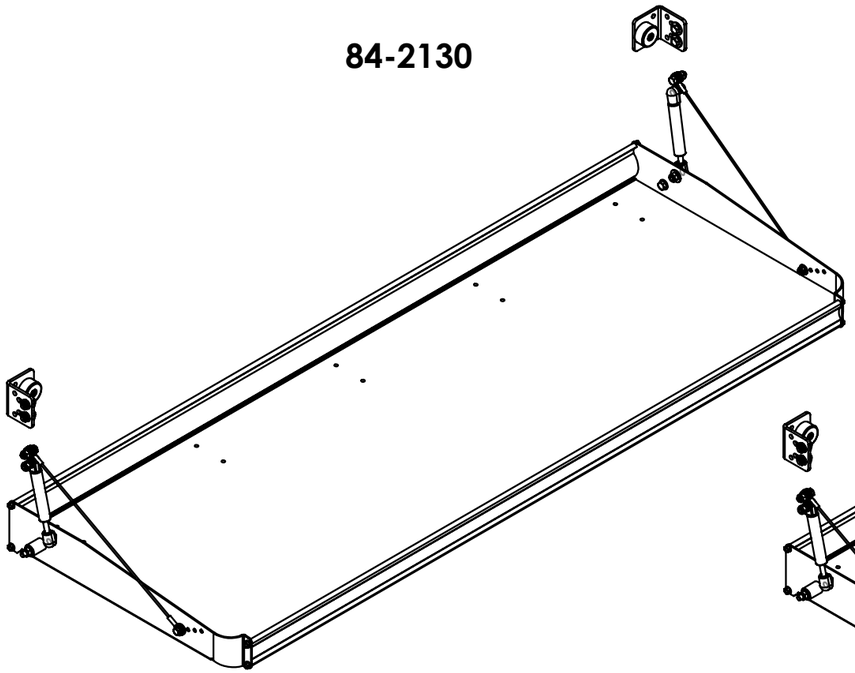

84-2158

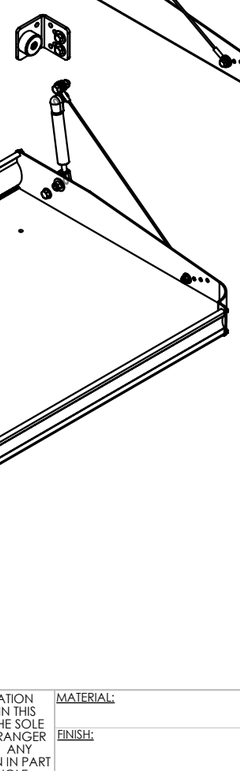

84-2172

3D MODEL VERIFIED BY:CR	05-07-2015	THE INFORMATION CONTAINED IN THIS DRAWING IS THE SOLE PROPERTY OF RANGER DESIGN INC. ANY REPRODUCTION IN PART OR AS A WHOLE WITHOUT THE WRITTEN PERMISSION OF RANGER DESIGN INC IS PROHIBITED.
3D MODEL APPROVED BY: CR	05-07-2015	MM-DD-YYYY
DESIGNED BY:	CR	09-18-2013
DRAWN BY:	GK	05-05-2015
VERIFIED BY:	CR	05-07-2015
APPROVED BY:	CR	05-07-2015

MATERIAL:

FINISH:

UNLESS OTHERWISE SPECIFIED DIMENSIONS ARE IN INCHS

GENERAL TOLERANCES
FRACTIONAL: ±1/32
DECIMAL: 0.000 = ±0.005
0.00 = ±0.01
0.0 = ±0.05
ANGULAR: ±0.1°
HOLE DIAMETER: ±0.005

BENDING TOLERANCES
BEND: ±0.010
ANGULAR: ±0.5°
HEM: ±0.015

THIRD ANGLE PROJECTION

Ranger Design inc.
19160 Cruickshank,
Baie d'Urfé,Québec,
Canada H9X 3P1

TITLE:
SHELF - FOLD-AWAY SHELVING UNIT - 21" - GENERIC

SIZE	DWG. NO.	REV
B	84-21xx	A

E.W.: 12.29 | SCALE: 1:10 | SHEET 1 OF 8

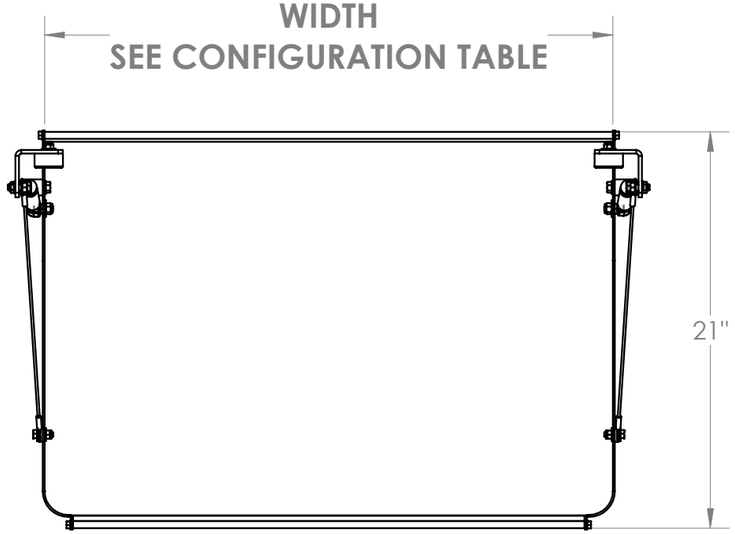

CONFIGURATION TABLE	
84-21xx	**WIDTH**
84-2130	30"
84-2136	36"
84-2148	48"
84-2158	58"
84-2172	72"

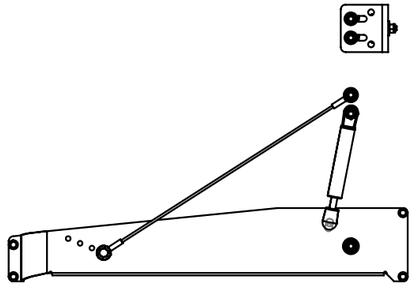

ZONE	REV	DESCRIPTION	DATE (MM-DD-YYYY)	BY
	A	RELEASED FOR PRODUCTION: - ECN 2334	05-05-2015	GK
REVISIONS				

THE INFORMATION CONTAINED IN THIS DRAWING IS THE SOLE PROPERTY OF RANGER DESIGN INC. ANY REPRODUCTION IN PART OR AS A WHOLE WITHOUT THE WRITTEN PERMISSION OF RANGER DESIGN INC IS PROHIBITED.

3D MODEL VERIFIED BY: CR		05-07-2015
3D MODEL APPROVED BY: CR		05-07-2015
DESIGNED BY:	CR	09-18-2013
DRAWN BY:	GK	05-05-2015
VERIFIED BY:	CR	05-07-2015
APPROVED BY:	CR	05-07-2015

MATERIAL:

FINISH:

UNLESS OTHERWISE SPECIFIED DIMENSIONS ARE IN INCHS

GENERAL TOLERANCES
FRACTIONAL: ±1/32
DECIMAL: 0.000 = ±0.005
0.00 = ±0.01
0.0 = ±0.05
ANGULAR: ±0.1°
HOLE DIAMETER: ±0.005

BENDING TOLERANCES
BEND: ±0.010
ANGULAR: ±0.5°
HEM: ±0.015

THIRD ANGLE PROJECTION

Ranger Design inc.
19160 Cruickshank,
Baie d'Urfé,Québec,
Canada H9X 3P1

TITLE:
SHELF - FOLD-AWAY SHELVING UNIT - 21" - GENERIC

SIZE	DWG. NO.	REV
B	84-21xx	A

E.W.: 12.29 | SCALE: 1:8 | SHEET 2 OF 8

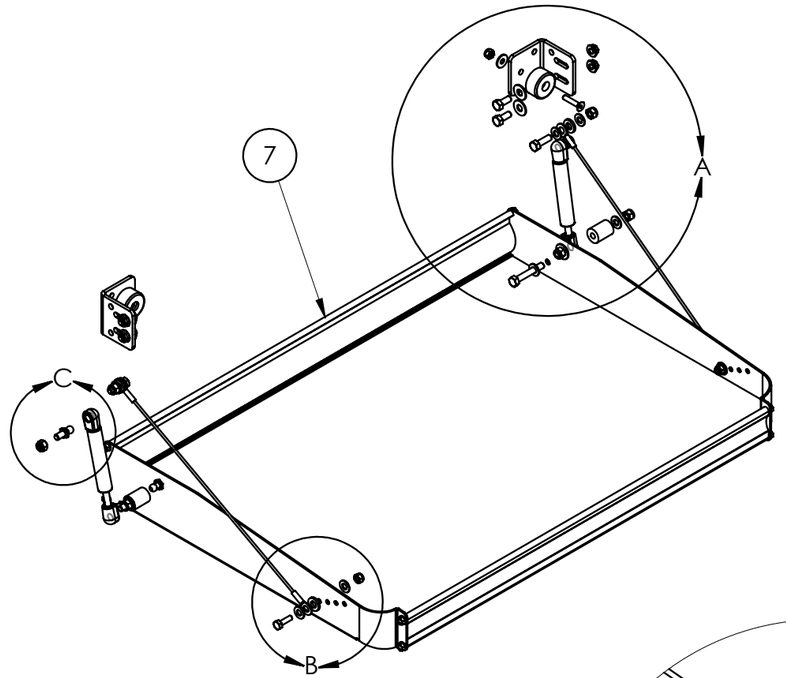

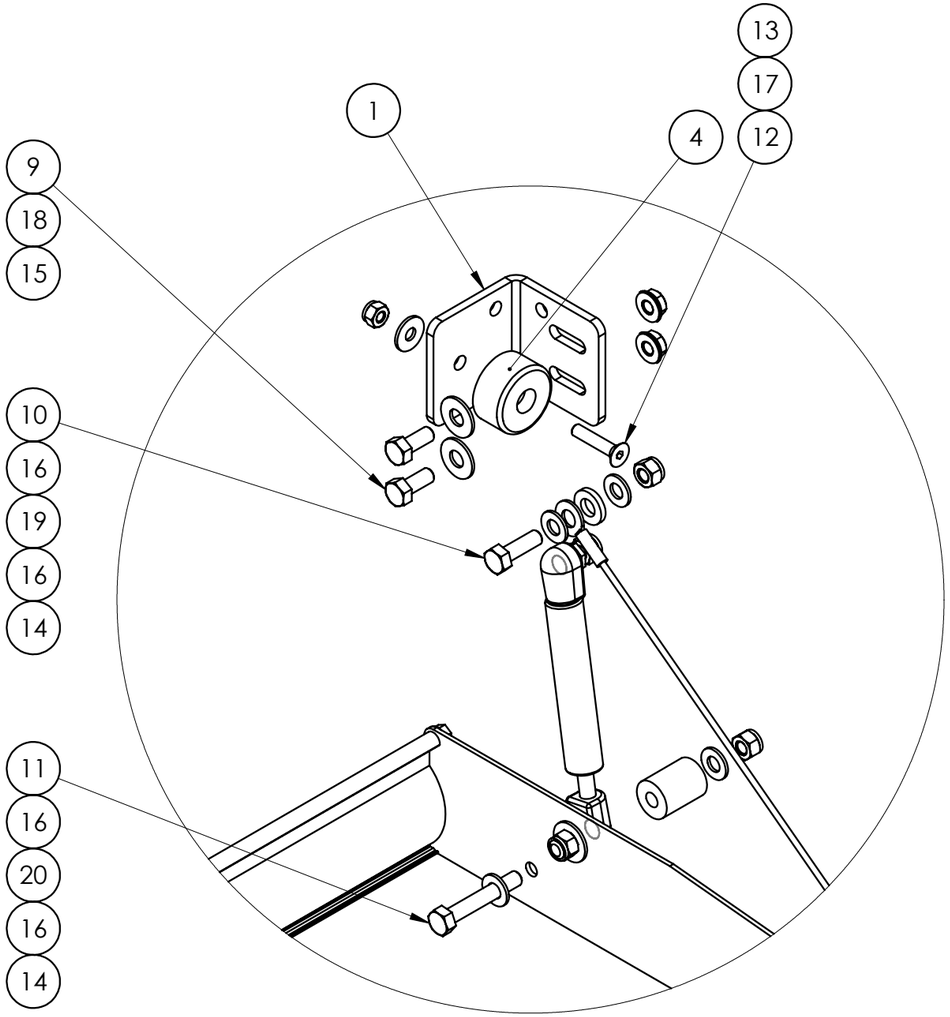

DETAIL A
SCALE 1 : 3

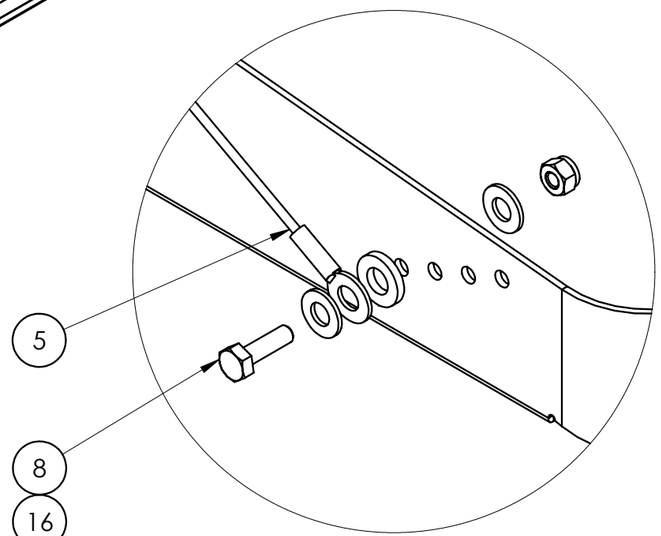

DETAIL B
SCALE 1 : 2

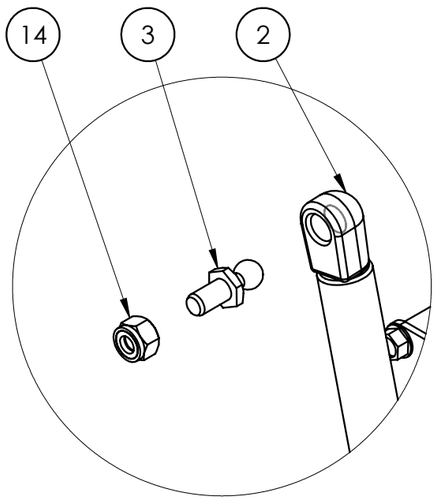

DETAIL C
SCALE 1 : 2

3D MODEL VERIFIED BY: CR	05-07-2015	THE INFORMATION CONTAINED IN THIS DRAWING IS THE SOLE PROPERTY OF RANGER DESIGN INC. ANY REPRODUCTION IN PART OR AS A WHOLE WITHOUT THE WRITTEN PERMISSION OF RANGER DESIGN INC IS PROHIBITED.	
3D MODEL APPROVED BY: CR	05-07-2015	MM-DD-YYYY	
DESIGNED BY:	CR	09-18-2013	
DRAWN BY:	GK	05-05-2015	
VERIFIED BY:	CR	05-07-2015	
APPROVED BY:	CR	05-07-2015	

MATERIAL:

FINISH:

UNLESS OTHERWISE SPECIFIED DIMENSIONS ARE IN INCHS

GENERAL TOLERANCES
FRACTIONAL: ±1/32
DECIMAL: 0.000 = ±0.005
0.00 = ±0.01
0.0 = ±0.05
ANGULAR: ±0.1°
HOLE DIAMETER: ±0.005

BENDING TOLERANCES
BEND: ±0.010
ANGULAR: ±0.5°
HEM: ±0.015

THIRD ANGLE PROJECTION

RANGER DESIGN

Ranger Design inc.
19160 Cruickshank,
Baie d'Urfé,Québec,
Canada H9X 3P1

TITLE:
SHELF - FOLD-AWAY SHELVING UNIT - 21" - GENERIC

SIZE	DWG. NO.	REV
B	84-21xx	A

E.W.: 12.29 | SCALE: 1:8 | SHEET 3 OF 8

BILL OF MATERIALS FOR 84-2130

ITEM NO.	NUMBER	DESCRIPTION	QTY.
1	40-402	BRACKET	2
2	40-660	GAS SPRING ASSEMBLY, 7"LONG 120lb, STROKE 2.325"	2
3	40-661	BALL STUD, 10mm, ZINC PLATED	2
4	40-662	FUS RUBBER BUMBER	2
5	40-664	STEEL CABLE ASSEM. - 16" CABLE, W/ STAKE & EYE	2
6	79-917	LABEL - FLAT, FOLD-AWAY	1
7	83-2130	FOLD-AWAY ASSEMBLY, SHELF FILLER, 20.476" X 30"	1
8	90-112	BOLT HEX HEAD 1/4"-20 X 7/8" GR-5 ZINC	2
9	90-204	BOLT HEX HEAD 5/16"-18 X 3/4" GR-5 ZINC	4
10	90-208	BOLT HEX HEAD 5/16"-18 X 1" GR-5 ZINC	2
11	90-224	BOLT HEX 5/16-18X2 GR-5 ZINC	2
12	90-749	SCREW - SOCKED COUNTERSUNK HEAD CAP 1/4-20 X 1-1/4 SS304	2
13	94-106	NUT LOCK HX-HD NYL-INSRT 1/4"-20 ZINC	2
14	94-110	NUT LOCK HX-HD NYL-INSRT 5/16"-18 ZINC	8
15	94-116	NUT-FLANGE, SERRATED 5/16"-18 ZINC	4
16	98-110	WASHER FLAT 5/16" SAE, ZINC	12
17	98-112	WASHER FLAT 1/4", 3/4" OD, ZINC	2
18	98-116	WASHER FLAT 5/16", 7/8" OD, ZINC	4
19	98-131	NYLON WASHER 5/16"ID X 1/8"T	4
20	99-102	SPACER, UHMW, 0.323"ID x 0.750"OD x 1.125"	2

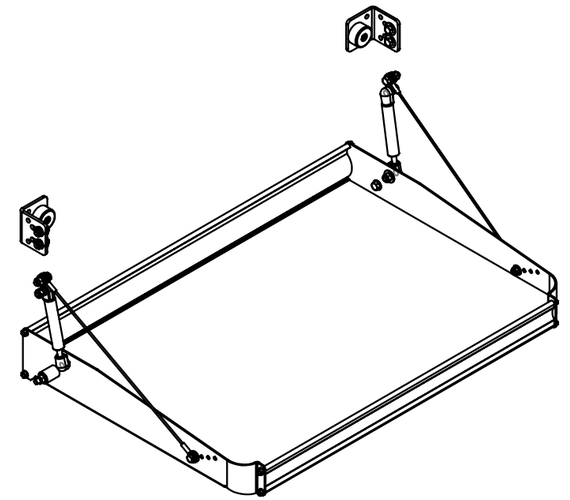

THE INFORMATION CONTAINED IN THIS DRAWING IS THE SOLE PROPERTY OF RANGER DESIGN INC. ANY REPRODUCTION IN PART OR AS A WHOLE WITHOUT THE WRITTEN PERMISSION OF RANGER DESIGN INC IS PROHIBITED.

3D MODEL VERIFIED BY:	CR	05-07-2015
3D MODEL APPROVED BY:	CR	05-07-2015
DESIGNED BY:	CR	09-18-2013
DRAWN BY:	GK	05-05-2015
VERIFIED BY:	CR	05-07-2015
APPROVED BY:	CR	05-07-2015

MM-DD-YYYY

MATERIAL:

FINISH:

UNLESS OTHERWISE SPECIFIED DIMENSIONS ARE IN INCHS

GENERAL TOLERANCES
FRACTIONAL: ±1/32
DECIMAL: 0.000 = ±0.005
0.00 = ±0.01
0.0 = ±0.05
ANGULAR: ±0.1°
HOLE DIAMETER: ±0.005

BENDING TOLERANCES
BEND: ±0.010
ANGULAR: ±0.5°
HEM: ±0.015

THIRD ANGLE PROJECTION

RANGER DESIGN
Ranger Design inc.
19160 Cruickshank,
Baie d'Urfé,Québec,
Canada H9X 3P1

TITLE:
SHELF - FOLD-AWAY SHELVING UNIT - 21" x 30"

SIZE	DWG. NO.	REV
B	84-2130	A

E.W.: 12.30 | SCALE: 1:10 | SHEET 4 OF 8

BILL OF MATERIALS FOR 84-2136

ITEM NO.	NUMBER	DESCRIPTION	QTY.
1	40-402	BRACKET	2
2	40-660	GAS SPRING ASSEMBLY, 7"LONG 120lb, STROKE 2.325"	2
3	40-661	BALL STUD, 10mm, ZINC PLATED	2
4	40-662	FUS RUBBER BUMBER	2
5	40-664	STEEL CABLE ASSEM. - 16" CABLE, W/ STAKE & EYE	2
6	79-917	LABEL - FLAT, FOLD-AWAY	1
7	83-2136	FOLD-AWAY ASSEMBLY, SHELF FILLER, 20.476" X 36"	1
8	90-112	BOLT HEX HEAD 1/4"-20 X 7/8" GR-5 ZINC	2
9	90-204	BOLT HEX HEAD 5/16"-18 X 3/4" GR-5 ZINC	4
10	90-208	BOLT HEX HEAD 5/16"-18 X 1" GR-5 ZINC	2
11	90-224	BOLT HEX 5/16-18X2 GR-5 ZINC	2
12	90-749	SCREW - SOCKED COUNTERSUNK HEAD CAP 1/4-20 X 1-1/4 SS304	2
13	94-106	NUT LOCK HX-HD NYL-INSRT 1/4"-20 ZINC	2
14	94-110	NUT LOCK HX-HD NYL-INSRT 5/16"-18 ZINC	8
15	94-116	NUT-FLANGE, SERRATED 5/16"-18 ZINC	4
16	98-110	WASHER FLAT 5/16" SAE, ZINC	12
17	98-112	WASHER FLAT 1/4", 3/4" OD, ZINC	2
18	98-116	WASHER FLAT 5/16", 7/8" OD, ZINC	4
19	98-131	NYLON WASHER 5/16"ID X 1/8"T	4
20	99-102	SPACER, UHMW, 0.323"ID x 0.750"OD x 1.125"	2

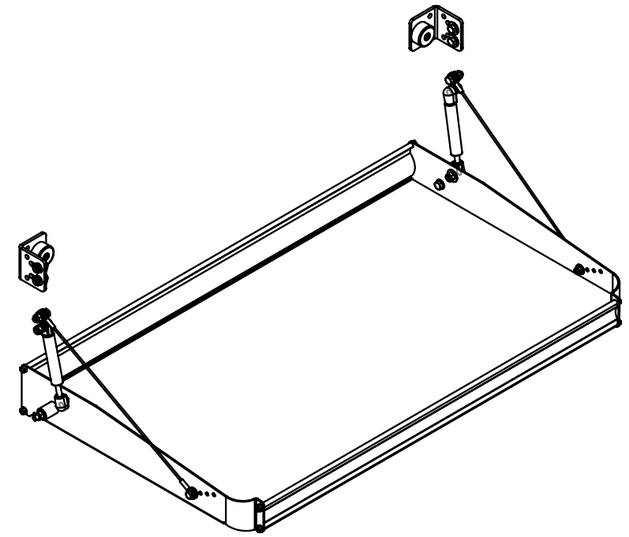

THE INFORMATION CONTAINED IN THIS DRAWING IS THE SOLE PROPERTY OF RANGER DESIGN INC. ANY REPRODUCTION IN PART OR AS A WHOLE WITHOUT THE WRITTEN PERMISSION OF RANGER DESIGN INC IS PROHIBITED.

3D MODEL VERIFIED BY:CR	05-07-2015	
3D MODEL APPROVED BY: CR	05-07-2015	MM-DD-YYYY
DESIGNED BY:	CR	09-18-2013
DRAWN BY:	GK	05-05-2015
VERIFIED BY:	CR	05-07-2015
APPROVED BY:	CR	05-07-2015

MATERIAL:

FINISH:

UNLESS OTHERWISE SPECIFIED DIMENSIONS ARE IN INCHS

GENERAL TOLERANCES
FRACTIONAL: ±1/32
DECIMAL: 0.000 = ±0.005
0.00 = ±0.01
0.0 = ±0.05
ANGULAR: ±0.1°
HOLE DIAMETER: ±0.005

BENDING TOLERANCES
BEND: ±0.010
ANGULAR: ±0.5°
HEM: ±0.015

THIRD ANGLE PROJECTION

RANGER DESIGN
Ranger Design inc.
19160 Cruickshank,
Baie d'Urfé,Québec,
Canada H9X 3P1

TITLE:
SHELF - FOLD-AWAY SHELVING UNIT - 21" x 36"

SIZE	DWG. NO.	REV
B	84-2136	A

E.W.: 14.13 | SCALE: 1:10 | SHEET 5 OF 8

BILL OF MATERIALS FOR 84-2148

ITEM NO.	NUMBER	DESCRIPTION	QTY.
1	40-402	BRACKET	2
2	40-660	GAS SPRING ASSEMBLY, 7"LONG 120lb, STROKE 2.325"	2
3	40-661	BALL STUD, 10mm, ZINC PLATED	2
4	40-662	FUS RUBBER BUMBER	2
5	40-664	STEEL CABLE ASSEM. - 16" CABLE, W/ STAKE & EYE	2
6	79-917	LABEL - FLAT, FOLD-AWAY	1
7	83-2148	FOLD-AWAY ASSEMBLY, SHELF FILLER, 20.476" X 48"	1
8	90-112	BOLT HEX HEAD 1/4"-20 X 7/8" GR-5 ZINC	2
9	90-204	BOLT HEX HEAD 5/16"-18 X 3/4" GR-5 ZINC	4
10	90-208	BOLT HEX HEAD 5/16"-18 X 1" GR-5 ZINC	2
11	90-224	BOLT HEX 5/16-18X2 GR-5 ZINC	2
12	90-749	SCREW - SOCKED COUNTERSUNK HEAD CAP 1/4-20 X 1-1/4 SS304	2
13	94-106	NUT LOCK HX-HD NYL-INSRT 1/4"-20 ZINC	4
14	94-110	NUT LOCK HX-HD NYL-INSRT 5/16"-18 ZINC	6
15	94-116	NUT-FLANGE, SERRATED 5/16"-18 ZINC	4
16	98-110	WASHER FLAT 5/16" SAE, ZINC	12
17	98-112	WASHER FLAT 1/4", 3/4" OD, ZINC	2
18	98-116	WASHER FLAT 5/16", 7/8" OD, ZINC	4
19	98-131	NYLON WASHER 5/16"ID X 1/8"T	4
20	99-102	SPACER, UHMW, 0.323"ID x 0.750"OD x 1.125"	2

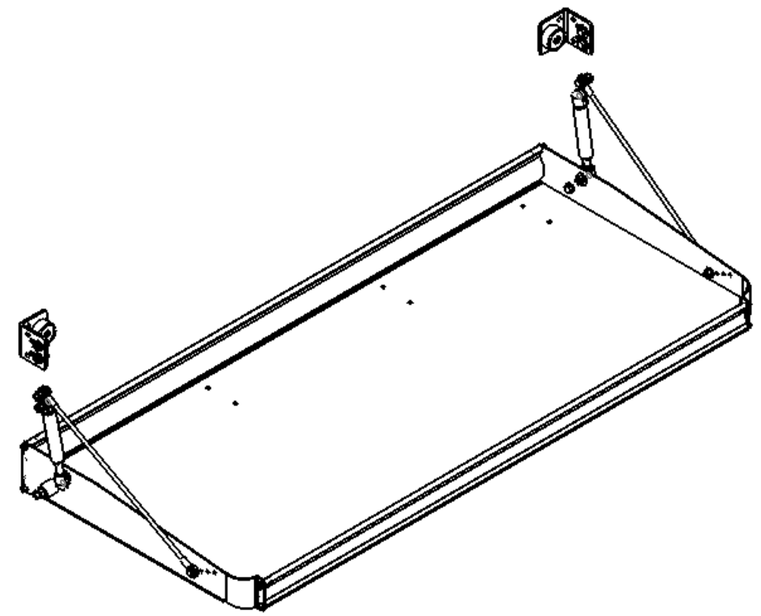

THE INFORMATION CONTAINED IN THIS DRAWING IS THE SOLE PROPERTY OF RANGER DESIGN INC. ANY REPRODUCTION IN PART OR AS A WHOLE WITHOUT THE WRITTEN PERMISSION OF RANGER DESIGN INC IS PROHIBITED.

3D MODEL VERIFIED BY:CR	05-07-2015	
3D MODEL APPROVED BY: CR	05-07-2015	MM-DD-YYYY
DESIGNED BY:	CR	09-18-2013
DRAWN BY:	GK	05-05-2015
VERIFIED BY:	CR	05-07-2015
APPROVED BY:	CR	05-07-2015

MATERIAL:

FINISH:

UNLESS OTHERWISE SPECIFIED DIMENSIONS ARE IN INCHS

GENERAL TOLERANCES
FRACTIONAL: ±1/32
DECIMAL: 0.000 = ±0.005
0.00 = ±0.01
0.0 = ±0.05
ANGULAR: ±0.1°
HOLE DIAMETER: ±0.005

BENDING TOLERANCES
BEND: ±0.010
ANGULAR: ±0.5°
HEM: ±0.015

THIRD ANGLE PROJECTION

RANGER DESIGN
Ranger Design inc.
19160 Cruickshank,
Baie d'Urfé,Québec,
Canada H9X 3P1

TITLE:
SHELF - FOLD-AWAY SHELVING UNIT - 21" x 48"

SIZE	DWG. NO.	REV
B	84-2148	A

E.W.: 17.77 | SCALE: 1:10 | SHEET 6 OF 8

BILL OF MATERIALS FOR 84-2158

ITEM NO.	NUMBER	DESCRIPTION	QTY.
1	40-402	BRACKET	2
2	40-660	GAS SPRING ASSEMBLY, 7"LONG 120lb, STROKE 2.325"	2
3	40-661	BALL STUD, 10mm, ZINC PLATED	2
4	40-662	FUS RUBBER BUMBER	2
5	40-664	STEEL CABLE ASSEM. - 16" CABLE, W/ STAKE & EYE	2
6	79-917	LABEL - FLAT, FOLD-AWAY	1
7	83-2158	FOLD-AWAY ASSEMBLY, SHELF FILLER, 20.476" X 58"	1
8	90-112	BOLT HEX HEAD 1/4"-20 X 7/8" GR-5 ZINC	2
9	90-204	BOLT HEX HEAD 5/16"-18 X 3/4" GR-5 ZINC	4
10	90-208	BOLT HEX HEAD 5/16"-18 X 1" GR-5 ZINC	2
11	90-224	BOLT HEX 5/16-18X2 GR-5 ZINC	2
12	90-749	SCREW - SOCKED COUNTERSUNK HEAD CAP 1/4-20 X 1-1/4 SS304	2
13	94-106	NUT LOCK HX-HD NYL-INSRT 1/4"-20 ZINC	2
14	94-110	NUT LOCK HX-HD NYL-INSRT 5/16"-18 ZINC	8
15	94-116	NUT-FLANGE, SERRATED 5/16"-18 ZINC	4
16	98-110	WASHER FLAT 5/16" SAE, ZINC	12
17	98-112	WASHER FLAT 1/4", 3/4" OD, ZINC	2
18	98-116	WASHER FLAT 5/16", 7/8" OD, ZINC	4
19	98-131	NYLON WASHER 5/16"ID X 1/8"T	4
20	99-102	SPACER, UHMW, 0.323"ID x 0.750"OD x 1.125"	2

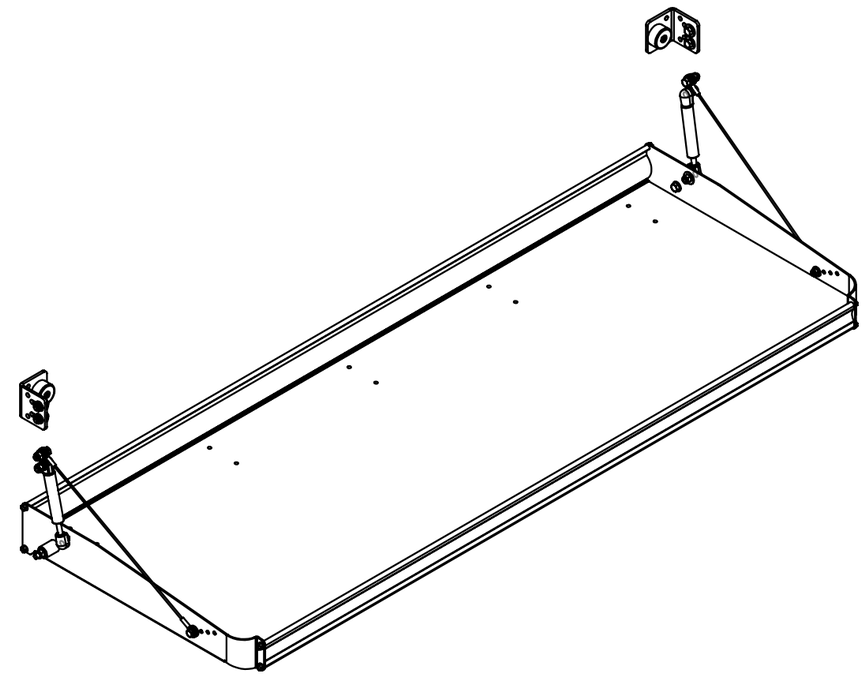

THE INFORMATION CONTAINED IN THIS DRAWING IS THE SOLE PROPERTY OF RANGER DESIGN INC. ANY REPRODUCTION IN PART OR AS A WHOLE WITHOUT THE WRITTEN PERMISSION OF RANGER DESIGN INC IS PROHIBITED.

3D MODEL VERIFIED BY: CR	05-07-2015	
3D MODEL APPROVED BY: CR	05-07-2015	MM-DD-YYYY
DESIGNED BY:	CR	09-18-2013
DRAWN BY:	GK	05-05-2015
VERIFIED BY:	CR	05-07-2015
APPROVED BY:	CR	05-07-2015

MATERIAL:

FINISH:

UNLESS OTHERWISE SPECIFIED DIMENSIONS ARE IN INCHS

GENERAL TOLERANCES
FRACTIONAL: ±1/32
DECIMAL: 0.000 = ±0.005
0.00 = ±0.01
0.0 = ±0.05
ANGULAR: ±0.1°
HOLE DIAMETER: ±0.005

BENDING TOLERANCES
BEND: ±0.010
ANGULAR: ±0.5°
HEM: ±0.015

THIRD ANGLE PROJECTION

RANGER DESIGN
Ranger Design inc.
19160 Cruickshank,
Baie d'Urfé,Québec,
Canada H9X 3P1

TITLE: SHELF - FOLD-AWAY SHELVING UNIT - 21" x 58"

SIZE	DWG. NO.	REV
B	84-2158	A

E.W.: 20.82 | SCALE: 1:10 | SHEET 7 OF 8

BILL OF MATERIALS FOR 84-2172

ITEM NO.	NUMBER	DESCRIPTION	QTY.
1	40-402	BRACKET	2
2	40-660	GAS SPRING ASSEMBLY, 7"LONG 120lb, STROKE 2.325"	2
3	40-661	BALL STUD, 10mm, ZINC PLATED	2
4	40-662	FUS RUBBER BUMBER	2
5	40-664	STEEL CABLE ASSEM. - 16" CABLE, W/ STAKE & EYE	2
6	79-917	LABEL - FLAT, FOLD-AWAY	1
7	83-2172	FOLD-AWAY ASSEMBLY, SHELF FILLER, 20.476" X 72"	1
8	90-112	BOLT HEX HEAD 1/4"-20 X 7/8" GR-5 ZINC	2
9	90-204	BOLT HEX HEAD 5/16"-18 X 3/4" GR-5 ZINC	4
10	90-208	BOLT HEX HEAD 5/16"-18 X 1" GR-5 ZINC	2
11	90-224	BOLT HEX 5/16-18X2 GR-5 ZINC	2
12	90-749	SCREW - SOCKED COUNTERSUNK HEAD CAP 1/4-20 X 1-1/4 SS304	2
13	94-106	NUT LOCK HX-HD NYL-INSRT 1/4"-20 ZINC	2
14	94-110	NUT LOCK HX-HD NYL-INSRT 5/16"-18 ZINC	8
15	94-116	NUT-FLANGE, SERRATED 5/16"-18 ZINC	4
16	98-110	WASHER FLAT 5/16" SAE, ZINC	12
17	98-112	WASHER FLAT 1/4", 3/4" OD, ZINC	2
18	98-116	WASHER FLAT 5/16", 7/8" OD, ZINC	4
19	98-131	NYLON WASHER 5/16"ID X 1/8"T	4
20	99-102	SPACER, UHMW, 0.323"ID x 0.750"OD x 1.125"	2

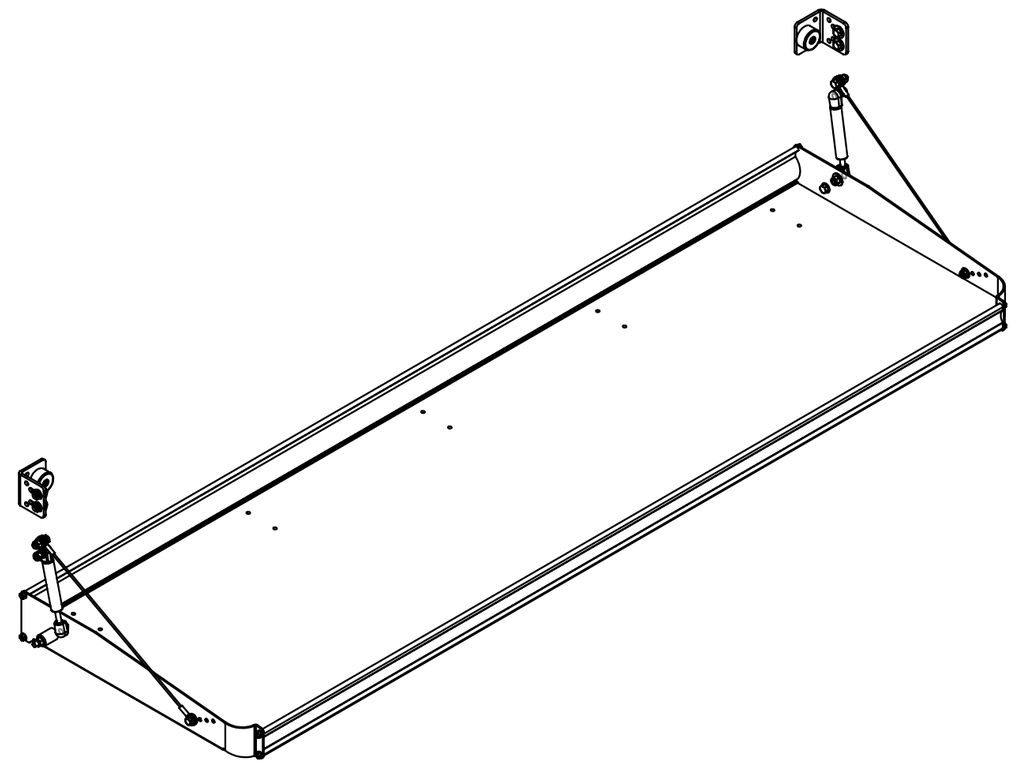

THE INFORMATION CONTAINED IN THIS DRAWING IS THE SOLE PROPERTY OF RANGER DESIGN INC. ANY REPRODUCTION IN PART OR AS A WHOLE WITHOUT THE WRITTEN PERMISSION OF RANGER DESIGN INC IS PROHIBITED.

3D MODEL VERIFIED BY:CR	05-07-2015	
3D MODEL APPROVED BY: CR	05-07-2015	MM-DD-YYYY
DESIGNED BY:	CR	09-18-2013
DRAWN BY:	GK	05-05-2015
VERIFIED BY:	CR	05-07-2015
APPROVED BY:	CR	05-07-2015

MATERIAL:

FINISH:

UNLESS OTHERWISE SPECIFIED DIMENSIONS ARE IN INCHS

GENERAL TOLERANCES
FRACTIONAL: ±1/32
DECIMAL: 0.000 = ±0.005
0.00 = ±0.01
0.0 = ±0.05
ANGULAR: ±0.1°
HOLE DIAMETER: ±0.005

BENDING TOLERANCES
BEND: ±0.010
ANGULAR: ±0.5°
HEM: ±0.015

THIRD ANGLE PROJECTION

RANGER DESIGN
Ranger Design inc.
19160 Cruickshank,
Baie d'Urfé,Québec,
Canada H9X 3P1

TITLE:
SHELF - FOLD-AWAY SHELVING UNIT - 21" x 72"

SIZE	DWG. NO.	REV
B	84-2172	A

E.W.: 25.09 | SCALE: 1:10 | SHEET 8 OF 8