# INSTALLATION GUIDE

## 6541-PS FLOOR

ProMaster ( 118" Wheelbase)

RANGER DESIGN

WARNING

Before the installation, carefully read the supplied installation guide to avoid possible injuries and damages resulting from incorrect installation. Always keep the installation guide in an accessible location at all times for reference during installation.

Installers must always wear appropriate safety gear during installation. This may include but is not limited to gloves, steel toed shoes, and safety glasses.

It is the installer's responsibility to ensure the install is safe and secure. For further questions please contact us at 1-800-565-5321.

## Phase 1 - Assembly


- ❑ 1.1 Setup..... 3 - 4


## Phase 2 - Installation


- ❑ 2.1 Install Preparation..... 5
- ❑ 2.2 Floor Installation..... 5 - 8


## Phase 3 - Add-ons


- ❑ 3.1 Typical Unit Installation.....8


# REQUIRED ITEMS

- ❑ Tape Measure
- ❑ Rubber Mallet
- ❑ Hex Key 5/16"
- ❑ Hex Key 4mm
- ❑ Hex Key 5mm
- ❑ Torx Key T45
- ❑ Socket 1/2"
- ❑ Wrench 1/2"
- ❑ Drill
- ❑ Drill Stop Collar
- ❑ Drill Bit 7/16"
- ❑ Marker

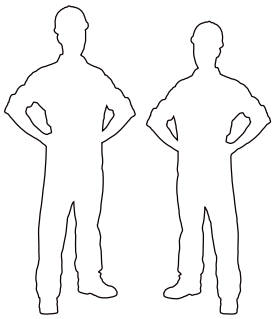

2
PERSONS

# PHASE 1 – ASSEMBLY

## 1.1 SETUP

1.1.1 Unpack components; compare with the bill of materials.

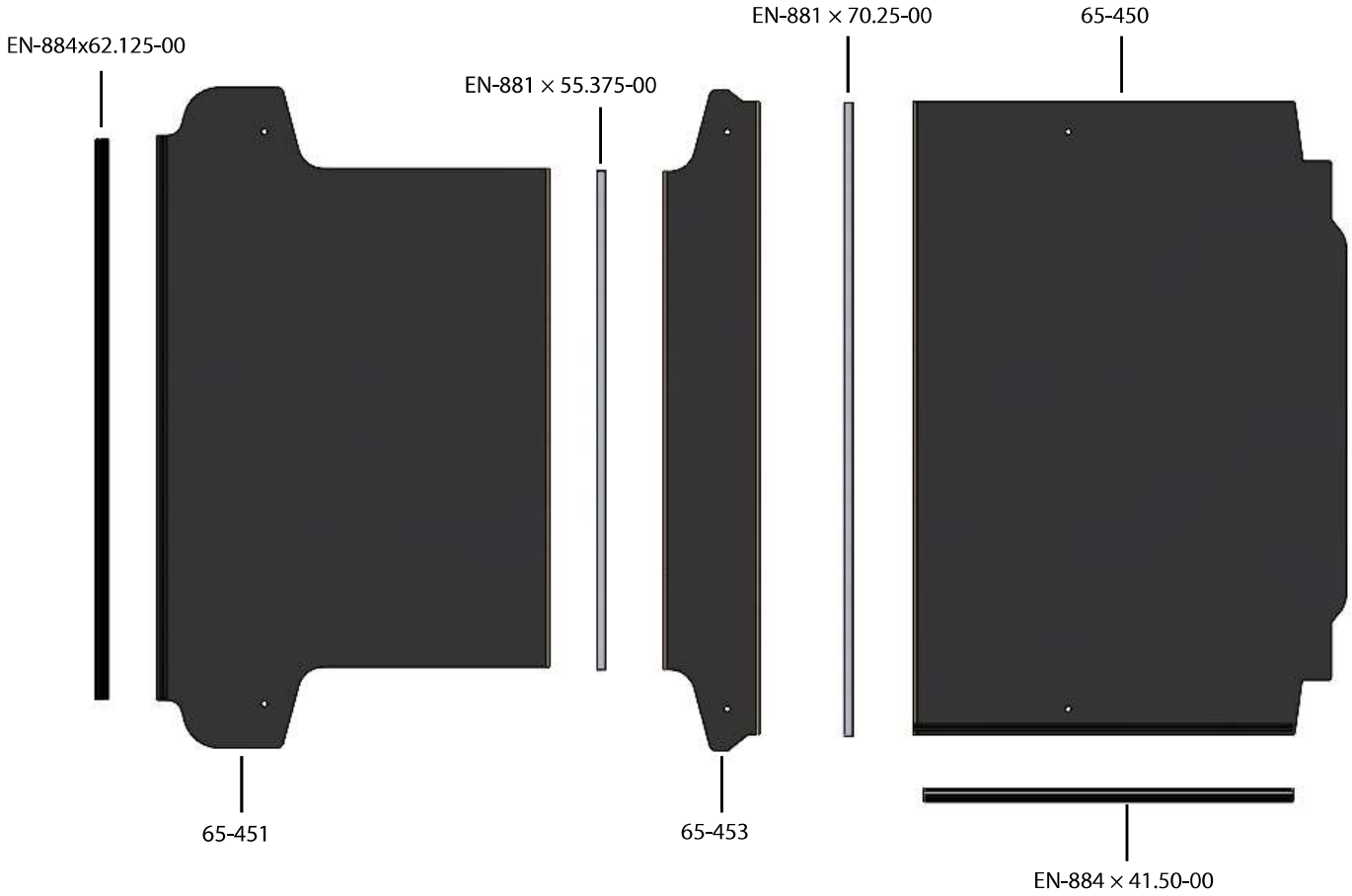


1.1.2 Verify all parts are present.

BILL OF MATERIALS

| Item No. | Description | Qty. |
|---|---|---|
| 65-450 | Floor Panel ( Front ) | 1 |
| 65-451 | Floor Panel ( Rear ) | 1 |
| 65-453 | Floor Panel ( Middle ) | 1 |
| EN-881 × 55.375-00 | H Beam Extrusion ( 55 - 3/8" ) | 1 |
| EN-881 × 70.25-00 | H Beam Extrusion ( 70 - 1/4" ) | 1 |
| EN-884 × 41.50-00 | Sill ( Side, 41 - 1/2" ) | 1 |
| EN-884 × 62.125-00 | Sill ( Rear, 62 - 1/8") | 1 |
| 96-6500 | Install Fastener Kit | 1 |
| 94-6503 | Install Fastener Kit | 1 |

1.1.3 Fastener kits.

96-6500 Fastener Kit → Fastener Install

30× # 90-204 Hex Bolt 5/16"-18 × 3/4" ZINC

30× # 99-114 Wood Inserts 5/16"-18 × 13mm ZINC

30×

#90-204 Hex Bolt 5/16" × 3/4"

#99-114 Wood Inserts 5/16"x13mm

94-6503 Fastener Kit → Fastener Install

6× # 90-016 Socket Cap M8-1.25 × 40mm ZINC

2× # 90-017 Guide Pin M8-1.25 x 20mm

6× # 98-146 Spacer 0.375″ID, 1″OD, 0.313″ Thick Nylon

6× # 98-169 Over size Flat Washer 5/16", O.D. 1-1/4" ZINC

6×

#90-016 Socket Cap M8-1.125" × 40mm

#98-169 Flat Washer

#98-146 Nylon Spacer

# PHASE 2 – INSTALLATION

2.1.1 Remove all the D-rings on the floor.

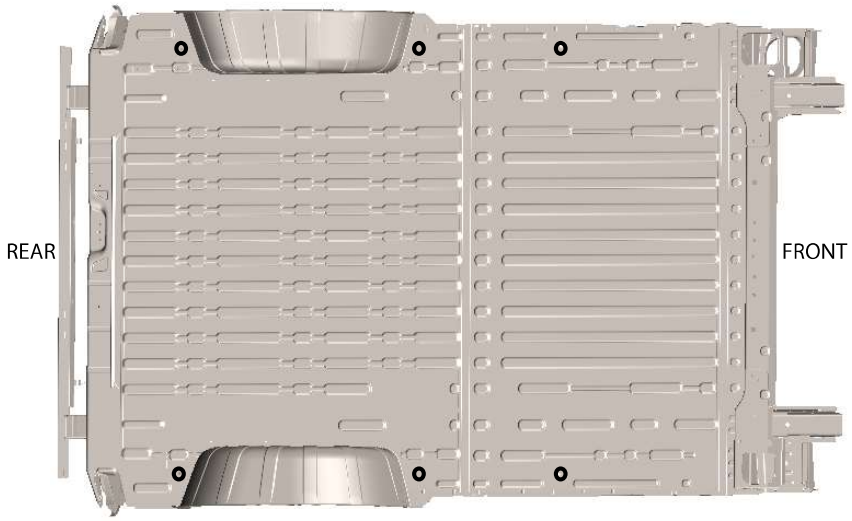


TOOLS
❑ Torx Key T45

**NOTE: Set aside for future steps.**

# PHASE 2 – INSTALLATION

## 2.2 FLOOR INSTALLATION

2.2.1 Place guide-pin & spacers in locations 1 & 2.

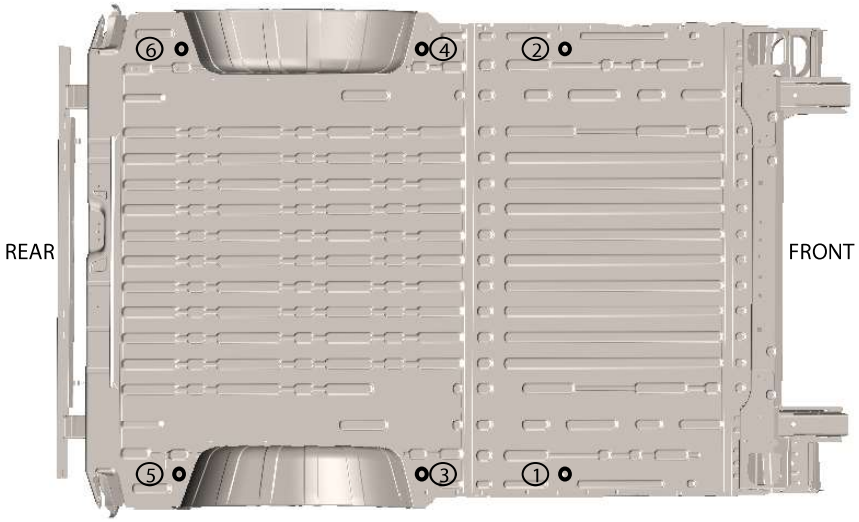


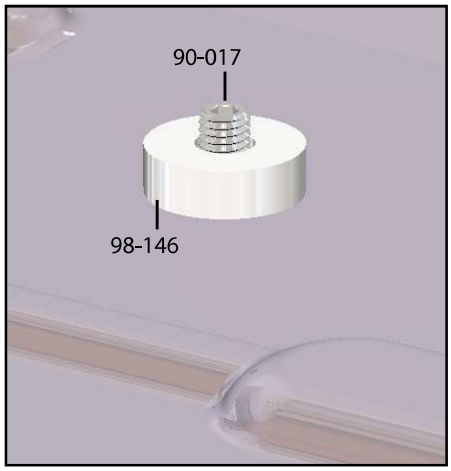


Guide pin (90-017) does not need to be fully threaded. This is to prevent the spacers from moving when installing the floor.

TOOLS
❑ Hex Socket

HARDWARE USED 2X

#90-017 Guide pin

#98-146 Spacer

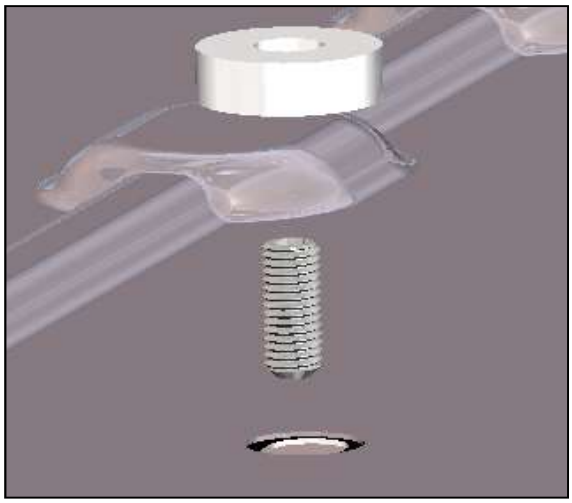

2.2.2 Place floor, remove Pins, add Hardware & D-Rings.

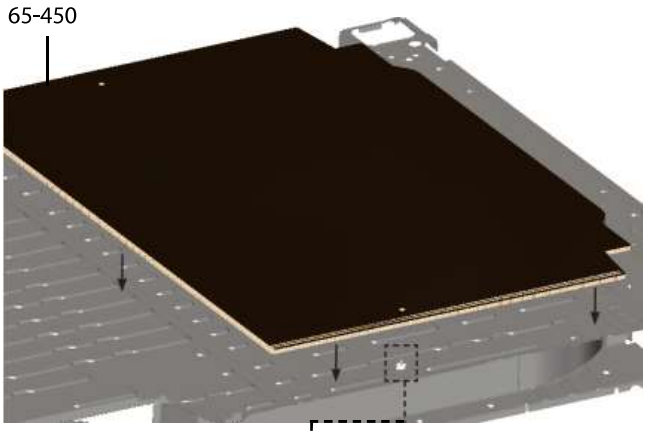


Remove guide pins and set aside for future steps.

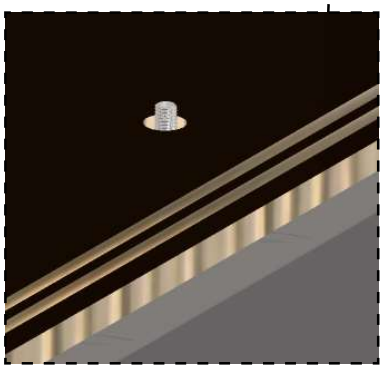

Install hardware provided with the OEM D-Rings to hold the floor panel in place. Tighten bolts to 11ft-lbs. Repeat step 2.2.2 for subsequent floor panels.

HARDWARE USED 2×

- #90-016 M8-1.25 x 40
- #98-169 Flat Washer Steel

TOOLS

- ❑ 5mm hex key

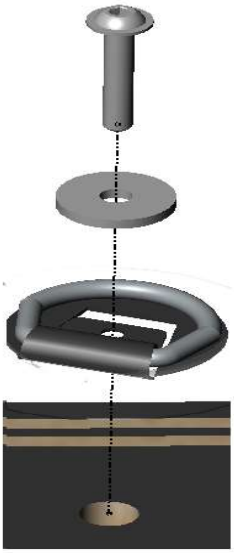

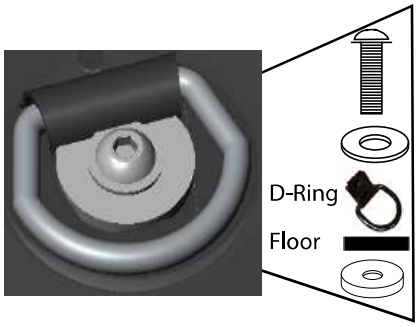


2.2.3 Install "H" beam to first floor piece.

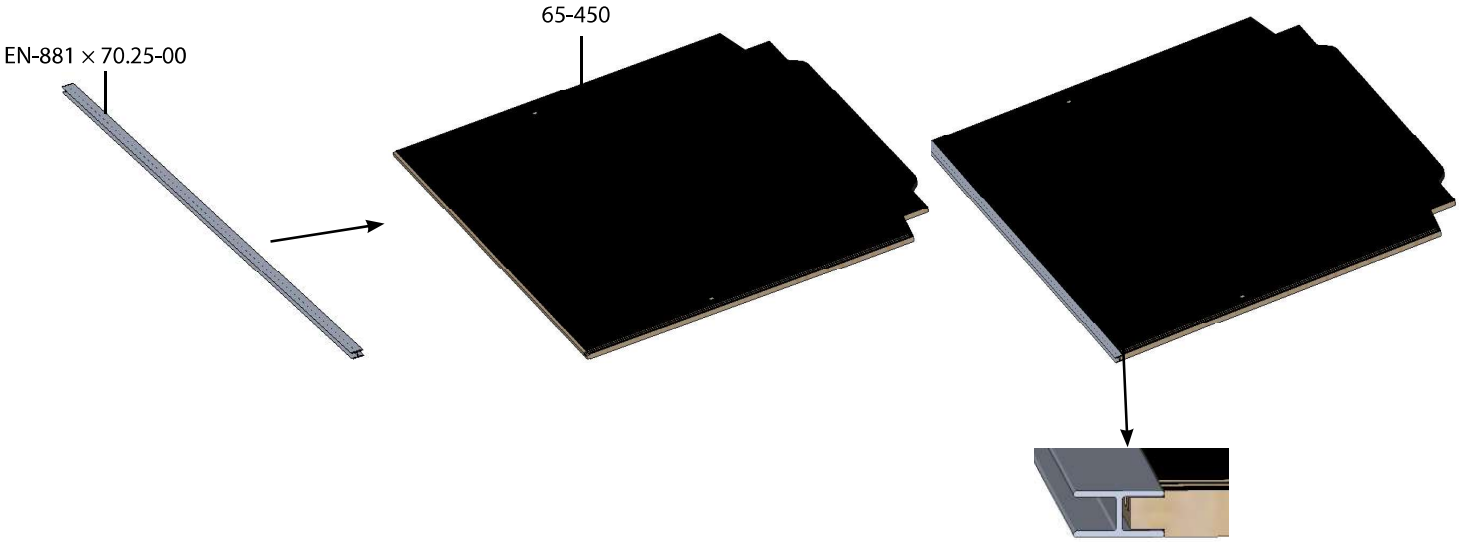

2.2.4 Repeat steps 2.2.1 to 2.2.3 for the remainder of the floor pieces.

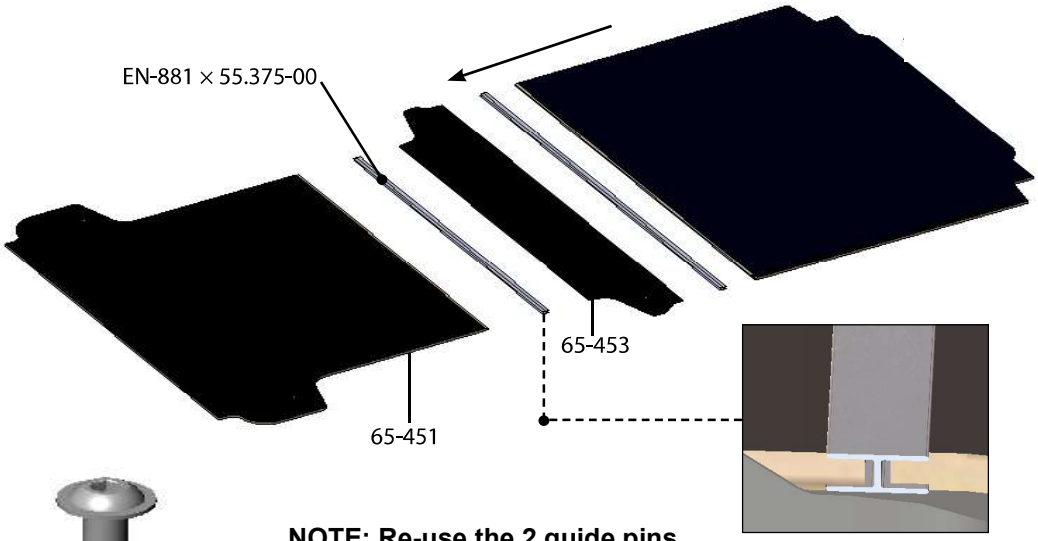


**NOTE: Re-use the 2 guide pins.**

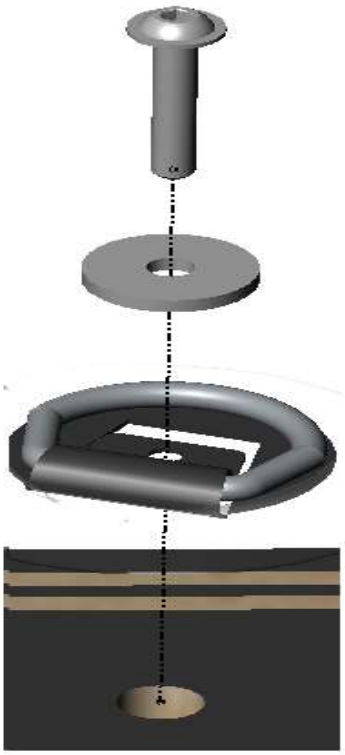

HARDWARE USED 4×

- #90-016 M8-1.25 x 40 mm
- #98-169 Flat Washer Steel
- #98-146 Spacer

TOOLS

- ❑ 4mm Hex Key
- ❑ 5mm Hex Key

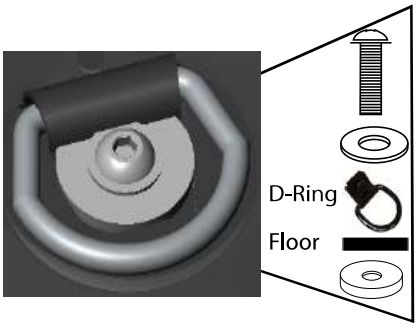


**NOTE: Tighten bolts to 11ft-lbs.**

2.2.5 Install FRONT & REAR sill extrusion.

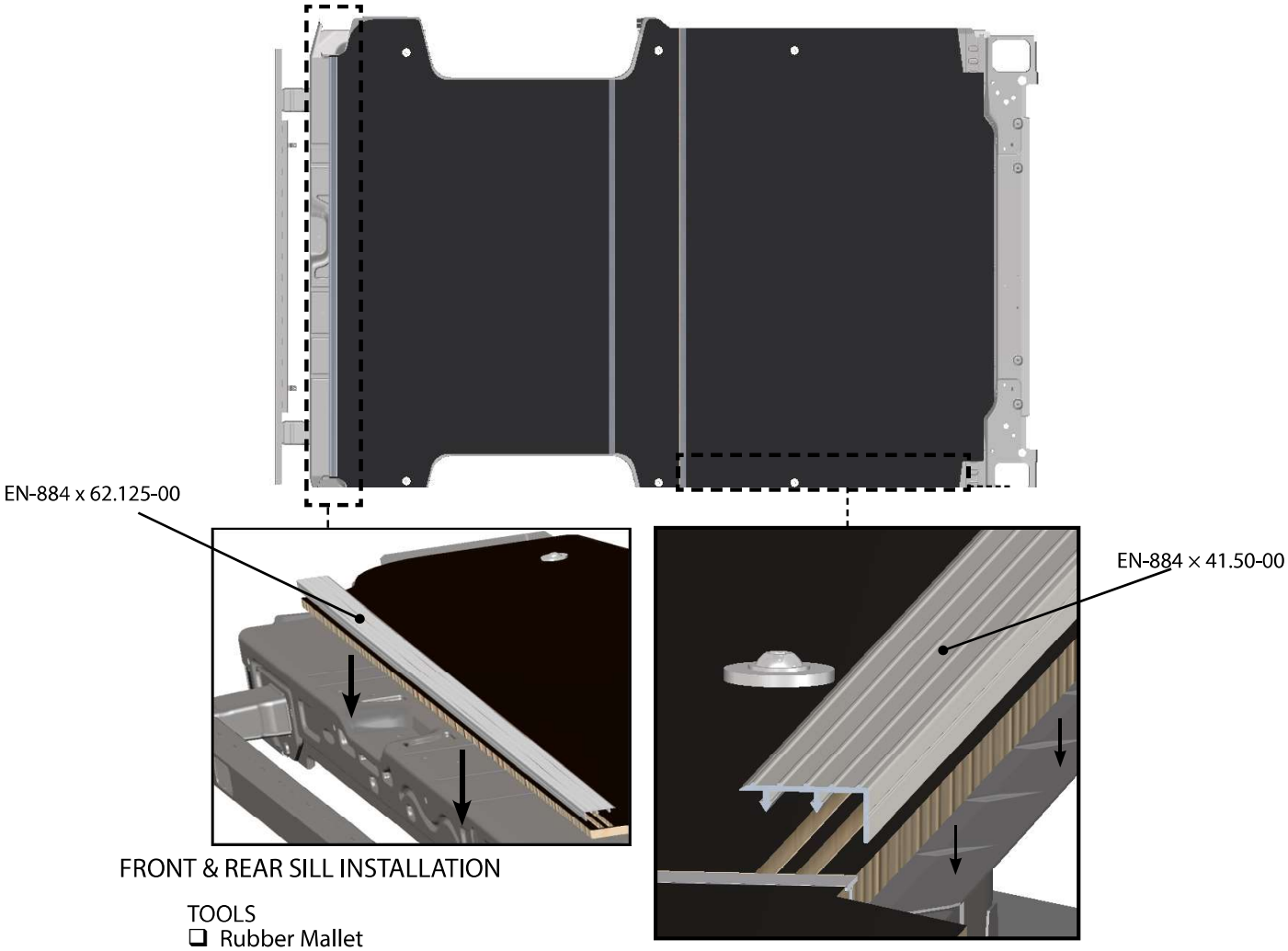


FRONT & REAR SILL INSTALLATION

TOOLS
- ❑ Rubber Mallet

**NOTE: Line up sill extrusion correctly before pressing it in. Use rubber mallet when needed.**

# PHASE 3 – ADD-ONS

## 3.1 TYPICAL UNIT INSTALLATION

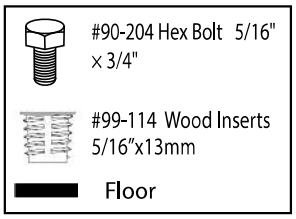


TOOLS
- ❑ Hex Key 5/16"
- ❑ Drill
- ❑ Drill Stop Collar
- ❑ Drill Bit 7/16"
- ❑ Wrench 1/2"

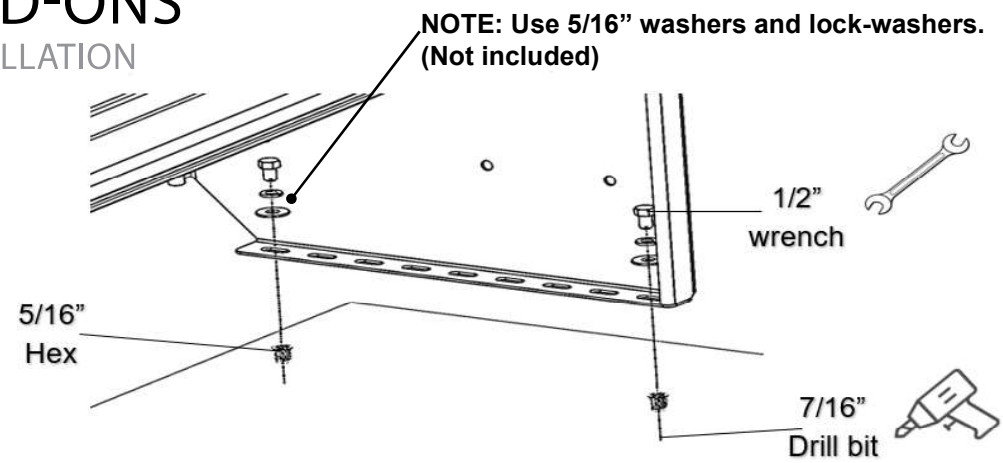


**"You have successfully installed your 6541-PS, thank you for doing business with us."**

For any feedback or suggestions, you may have, please contact: cs@rangerdesign.com