**WARNING:**
IF THERE ARE ANY DISCREPANCIES BETWEEN THE CAD FILE AND THE DRAWING, THE DRAWING WILL TAKE PRECEDENCE.
**IF IN DOUBT, ASK.**

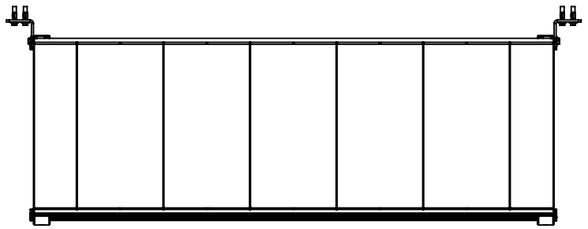

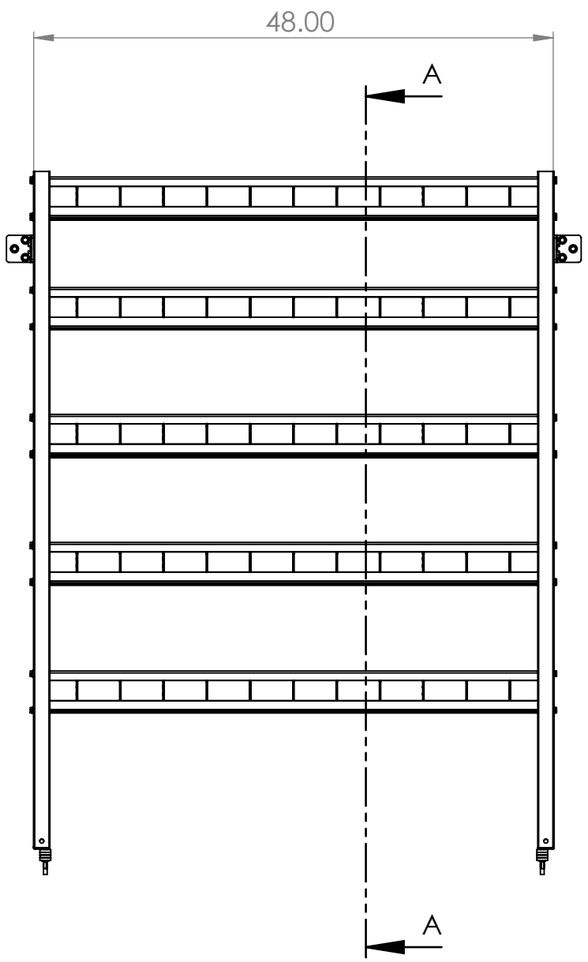


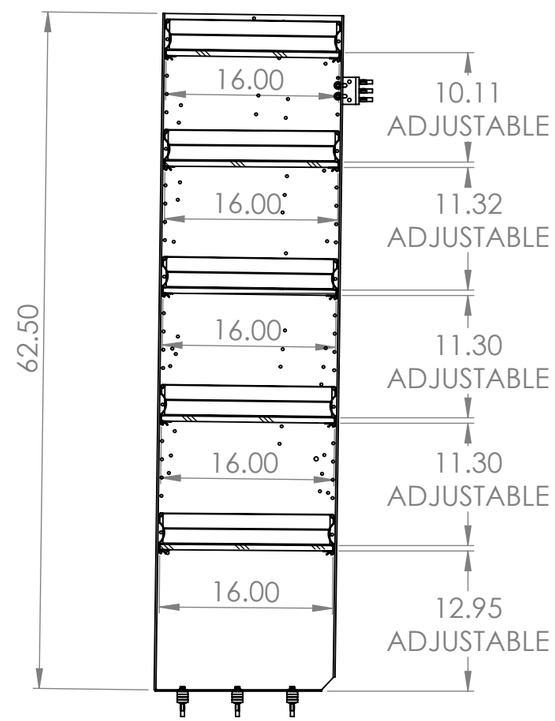


SECTION A-A
SCALE 1 : 14

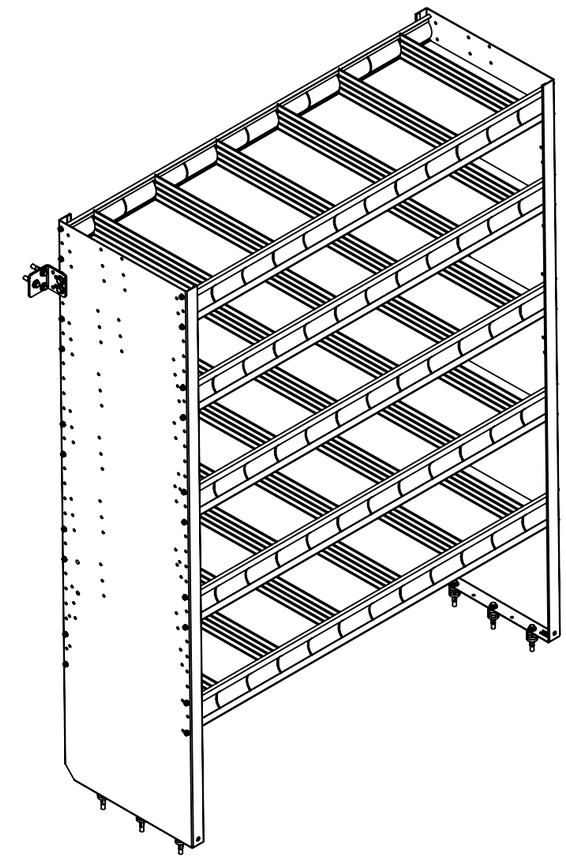

| ZONE | REV | DESCRIPTION | DATE (MM-DD-YYYY) | BY |
|---|---|---|---|---|
| | B | UPDATED BOM, ECN 1874-T | 09-26-2014 | AR |

REVISIONS

THE INFORMATION CONTAINED IN THIS DRAWING IS THE SOLE PROPERTY OF RANGER DESIGN INC. ANY REPRODUCTION IN PART OR AS A WHOLE WITHOUT THE WRITTEN PERMISSION OF RANGER DESIGN INC IS PROHIBITED.

| | | MM-DD-YYYY |
|---|---|---|
| DESIGNED BY: | FG | 10-14-2011 |
| DRAWN BY: | AR | 09-26-2014 |
| VERIFIED BY: | FG | 12-15-2014 |
| APPROVED BY: | FG | 12-15-2014 |

MATERIAL:

FINISH:

UNLESS OTHERWISE SPECIFIED
DIMENSIONS ARE IN INCHS

GENERAL TOLERANCES
FRACTIONAL: ±1/32
DECIMAL: 0.000 = ±0.005
0.00 = ±0.01
0.0 = ±0.05
ANGULAR: ±0.1°
HOLE DIAMETER: ±0.005

BENDING TOLERANCES
BEND: ±0.010
ANGULAR: ±0.5°
HEM: ±0.015

THIRD ANGLE PROJECTION

RANGER DESIGN
Ranger Design inc.
19160 Cruickshank,
Baie d'Urfé,Québec,
Canada H9X 3P1

TITLE:
SQUARE BACK SHELF UNIT

| SIZE | DWG. NO. | REV |
|---|---|---|
| B | 4848-5 | B |

E.W.: 91.76 | SCALE: 1:14 | SHEET 1 OF 3

**WARNING:**
IF THERE ARE ANY DISCREPANCIES BETWEEN THE CAD FILE AND THE DRAWING, THE DRAWING WILL TAKE PRECEDENCE.
**IF IN DOUBT, ASK.**

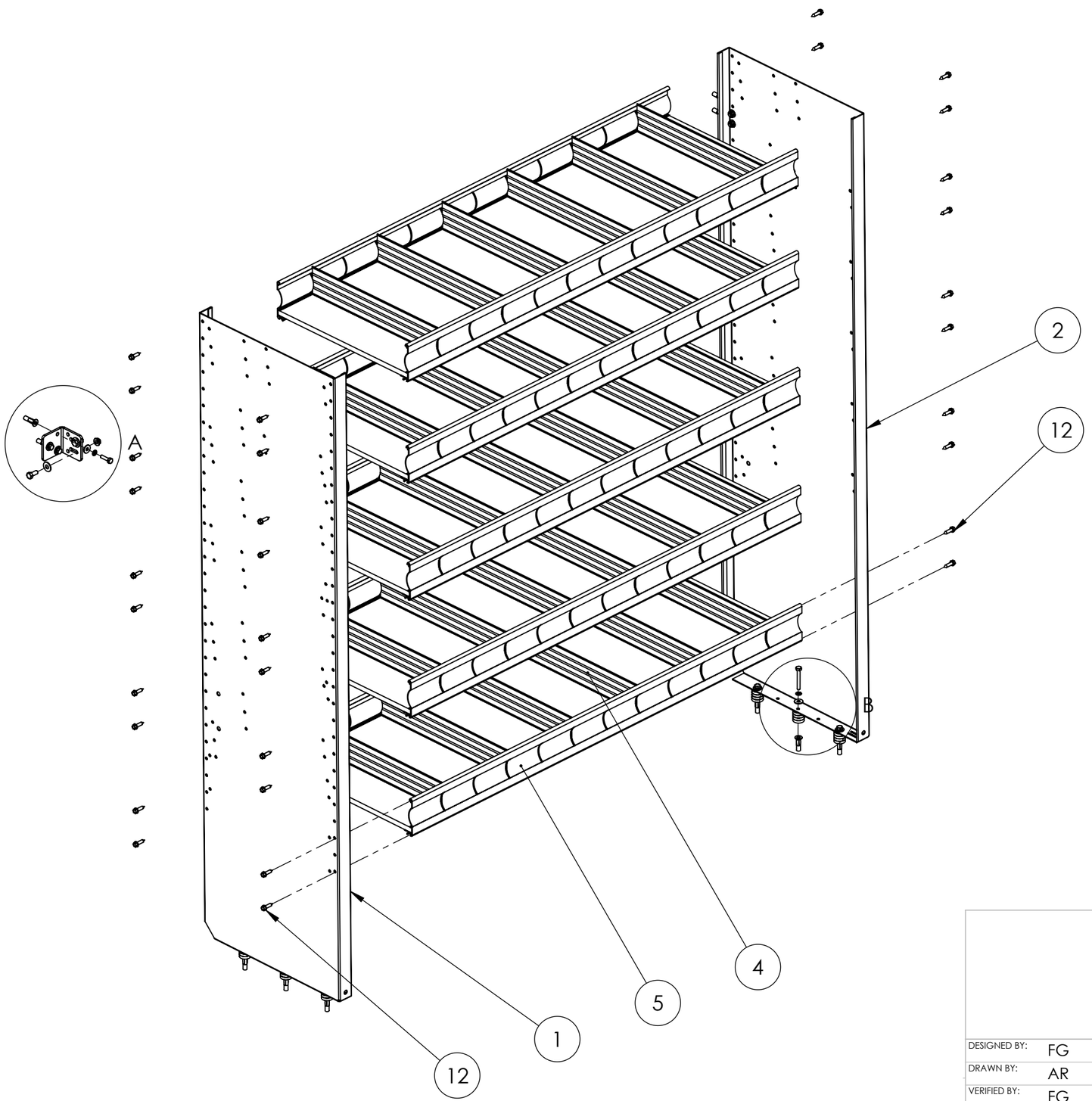


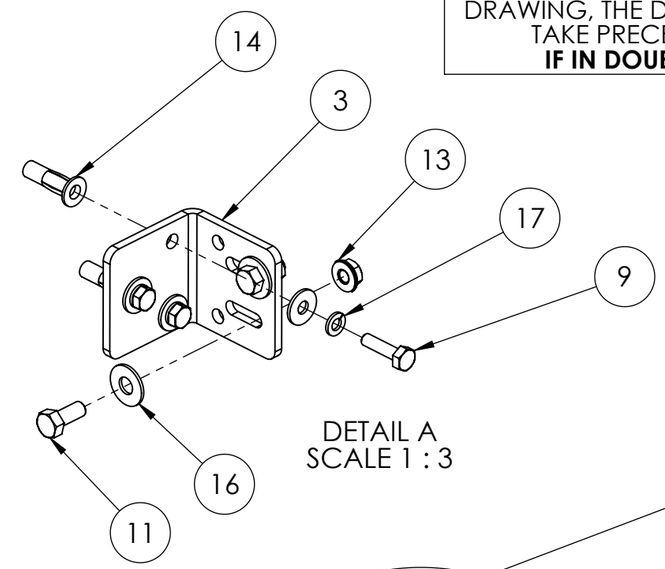


DETAIL A
SCALE 1 : 3

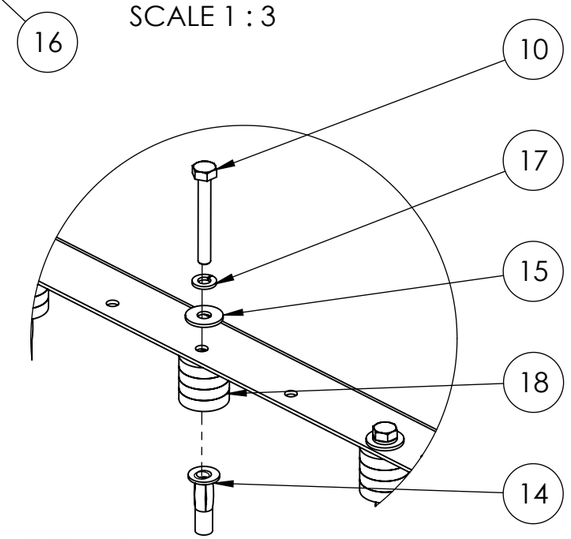


DETAIL B
SCALE 1 : 3

THE INFORMATION CONTAINED IN THIS DRAWING IS THE SOLE PROPERTY OF RANGER DESIGN INC. ANY REPRODUCTION IN PART OR AS A WHOLE WITHOUT THE WRITTEN PERMISSION OF RANGER DESIGN INC IS PROHIBITED.

| | | MM-DD-YYYY |
|---|---|---|
| DESIGNED BY: | FG | 10-14-2011 |
| DRAWN BY: | AR | 09-26-2014 |
| VERIFIED BY: | FG | 12-15-2014 |
| APPROVED BY: | FG | 12-15-2014 |

MATERIAL:

FINISH:

UNLESS OTHERWISE SPECIFIED
DIMENSIONS ARE IN INCHS

GENERAL TOLERANCES
FRACTIONAL: ±1/32
DECIMAL: 0.000 = ±0.005
0.00 = ±0.01
0.0 = ±0.05
ANGULAR: ±0.1°
HOLE DIAMETER: ±0.005

BENDING TOLERANCES
BEND: ±0.010
ANGULAR: ±0.5°
HEM: ±0.015

THIRD ANGLE PROJECTION

RANGER DESIGN
Ranger Design inc.
19160 Cruickshank,
Baie d'Urfé,Québec,
Canada H9X 3P1

TITLE:
SQUARE BACK SHELF UNIT

| SIZE | DWG. NO. | REV |
|---|---|---|
| B | 4848-5 | B |

E.W.: 91.76 | SCALE: 1:10 | SHEET 2 OF 3

| ITEM NO. | NUMBER | DESCRIPTION | QTY. |
|---|---|---|---|
| 1 | 40-128 | Shelf End Left | 1 |
| 2 | 40-159 | END PANEL, RIGHT, SQUARE BACK | 1 |
| 3 | 40-402 | BRACKET | 2 |
| 4 | 40-504 | DIVIDER - EXTRUDED, SHELF, 15-7/16" | 30 |
| 5 | 42-16X48 | SHELF W/ SLOTS 16" X 48" BLACK PLYWOOD | 5 |
| 6 | 79-043 | BOX, CARDBOARD (64" Cube), sleeve w/ caps, 17 1/2" x 8 1/4" x 64" | 1 |
| 7 | 79-914 | RANGER PROLINE BUBBLE STICKER | 1 |
| 8 | 79-940 | LABEL - CARTON, 8.5 x 11, PROLINE | 1 |
| 9 | 90-114 | BOLT HEX HEAD 1/4"-20 X 1" GR-5 ZINC | 6 |
| 10 | 90-130 | BOLT HEX HEAD 1/4"-20 X 2" FULL THREAD GR-5 ZINC | 6 |
| 11 | 90-204 | BOLT HEX HEAD 5/16"-18 X 3/4" GR-5 ZINC | 4 |
| 12 | 92-102 | SCREW HEX WASHER HEAD TYPE AB #14 X 1" ZINC | 40 |
| 13 | 94-116 | NUT-FLANGE, SERRATED 5/16"-18 ZINC | 4 |
| 14 | 94-130 | PLUS NUT .250 | 12 |
| 15 | 98-112 | WASHER FLAT 1/4", 3/4" OD, ZINC | 12 |
| 16 | 98-116 | WASHER FLAT 5/16", 7/8" OD, ZINC | 4 |
| 17 | 98-118 | WASHER LOCK SPRING REGULAR 1/4" ZINC | 12 |
| 18 | 98-157 | SPACER 0.375" ID X 1.0" OD X 0.25" LONG, NYLON | 24 |

**WARNING:**
IF THERE ARE ANY DISCREPANCIES BETWEEN THE CAD FILE AND THE DRAWING, THE DRAWING WILL TAKE PRECEDENCE.
**IF IN DOUBT, ASK.**

THE INFORMATION CONTAINED IN THIS DRAWING IS THE SOLE PROPERTY OF RANGER DESIGN INC. ANY REPRODUCTION IN PART OR AS A WHOLE WITHOUT THE WRITTEN PERMISSION OF RANGER DESIGN INC IS PROHIBITED.

| | | MM-DD-YYYY |
|---|---|---|
| DESIGNED BY: | FG | 10-14-2011 |
| DRAWN BY: | AR | 09-26-2014 |
| VERIFIED BY: | FG | 12-15-2014 |
| APPROVED BY: | FG | 12-15-2014 |

MATERIAL:

FINISH:

UNLESS OTHERWISE SPECIFIED
DIMENSIONS ARE IN INCHS

GENERAL TOLERANCES
FRACTIONAL: ±1/32
DECIMAL: 0.000 = ±0.005
0.00 = ±0.01
0.0 = ±0.05
ANGULAR: ±0.1°
HOLE DIAMETER: ±0.005

BENDING TOLERANCES
BEND: ±0.010
ANGULAR: ±0.5°
HEM: ±0.015

THIRD ANGLE PROJECTION

RANGER DESIGN
Ranger Design inc.
19160 Cruickshank,
Baie d'Urfé,Québec,
Canada H9X 3P1

TITLE:
SQUARE BACK SHELF UNIT

| SIZE | DWG. NO. | REV |
|---|---|---|
| B | 4848-5 | B |

E.W.: 91.76 | SCALE: 1:20 | SHEET 3 OF 3